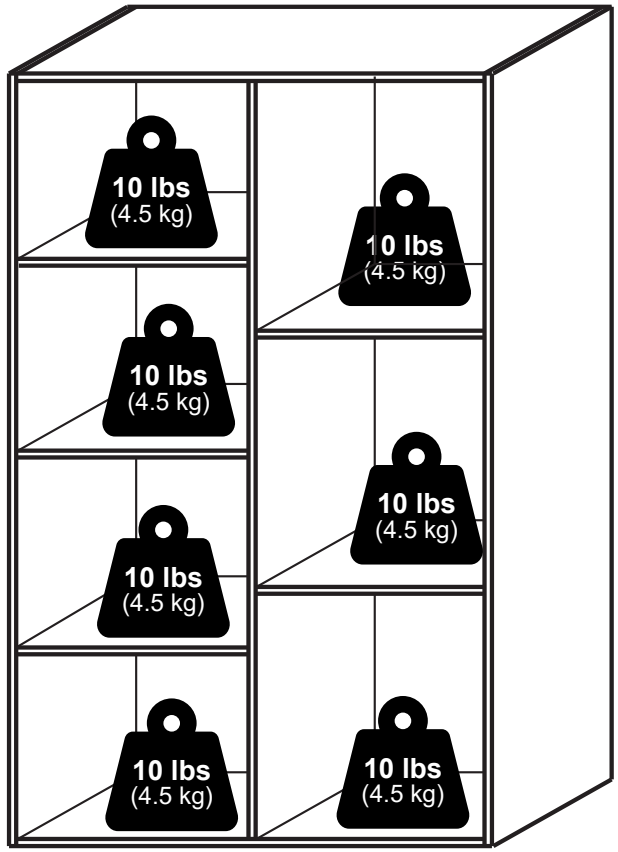

Furinno®

Fits Space, Fits Budget



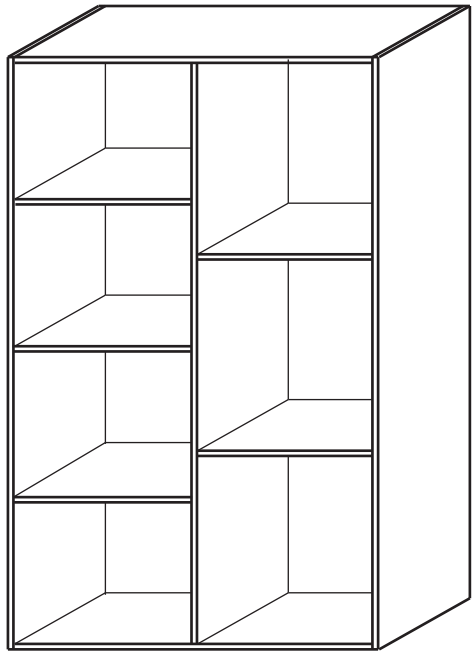

MODEL: 11048

support@furinno.com

www.furinno.com

1104820230519

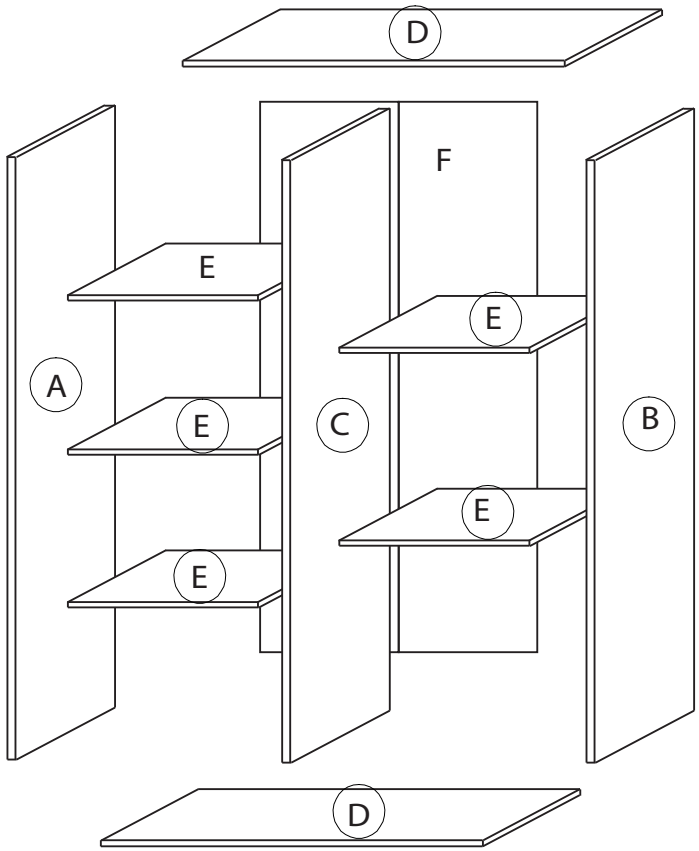

1	2	3	4
x 32	x 20	x 18	x 1
M4 x 32mm	2.5 x 18mm	13mm	

6

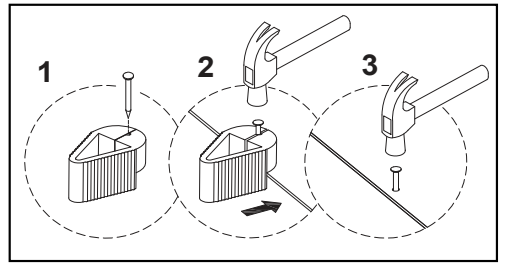

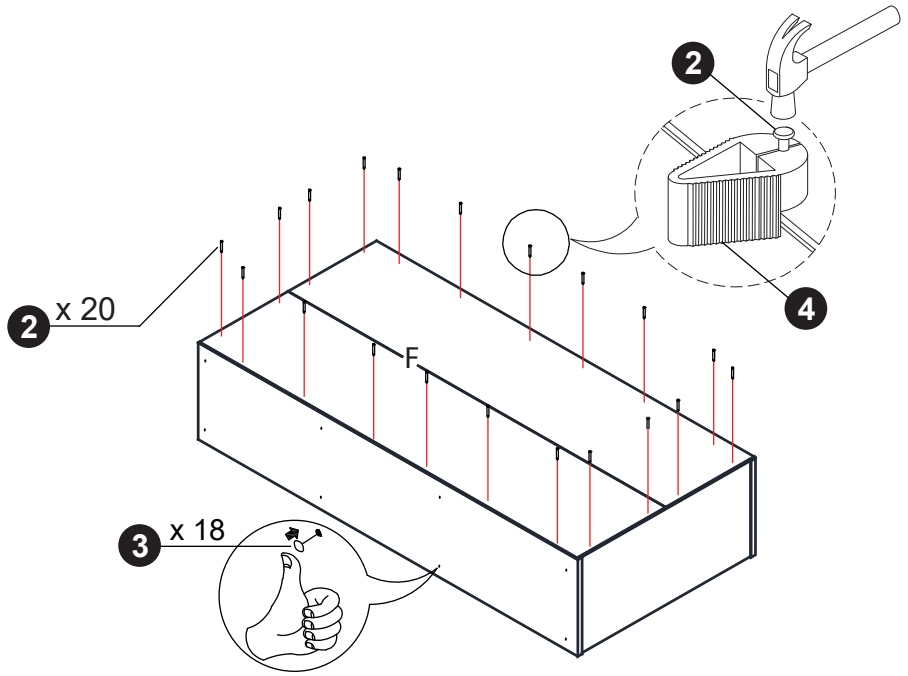

5

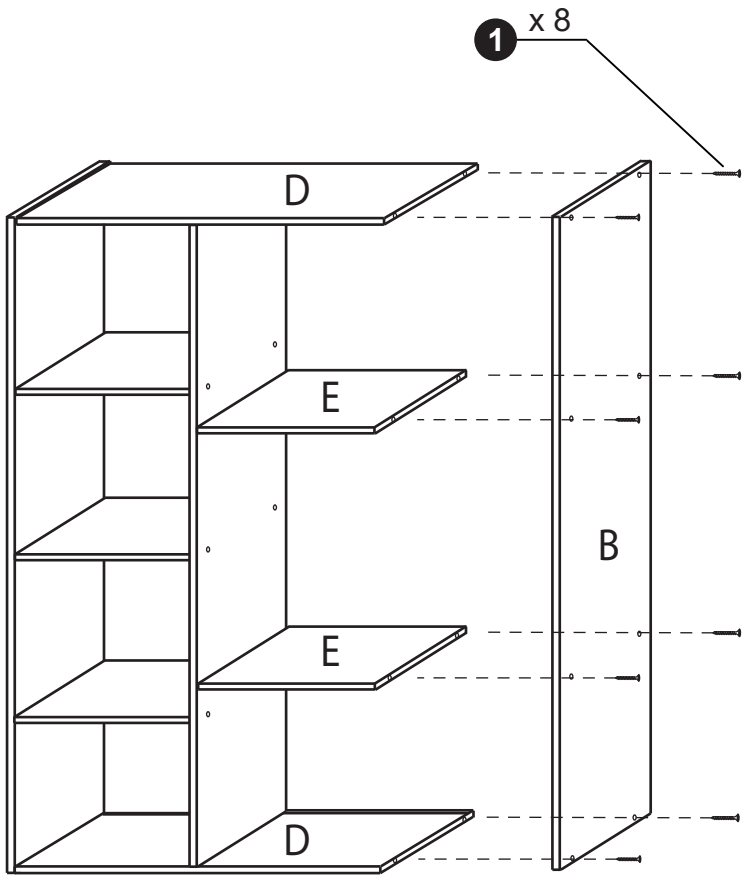

1

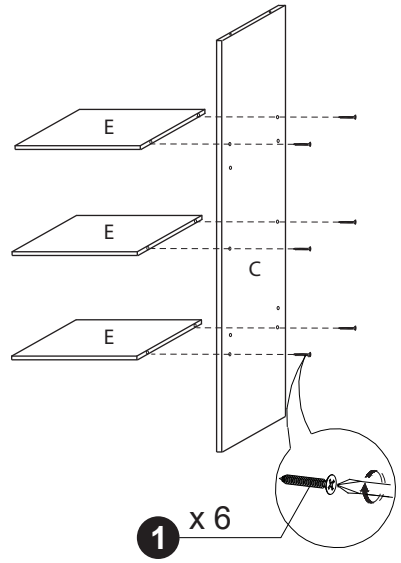

2

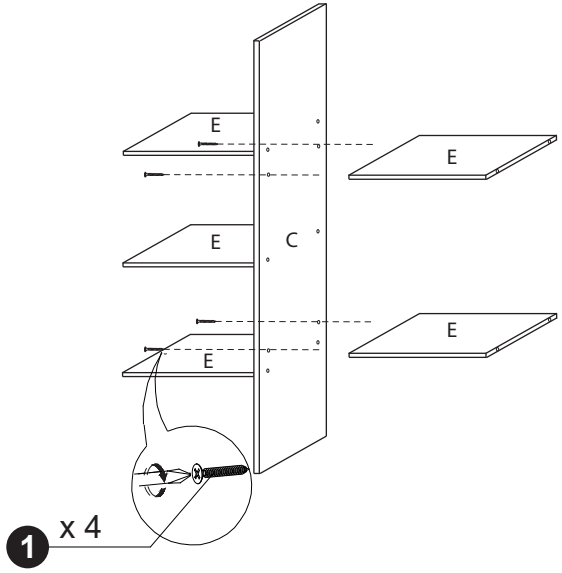

3

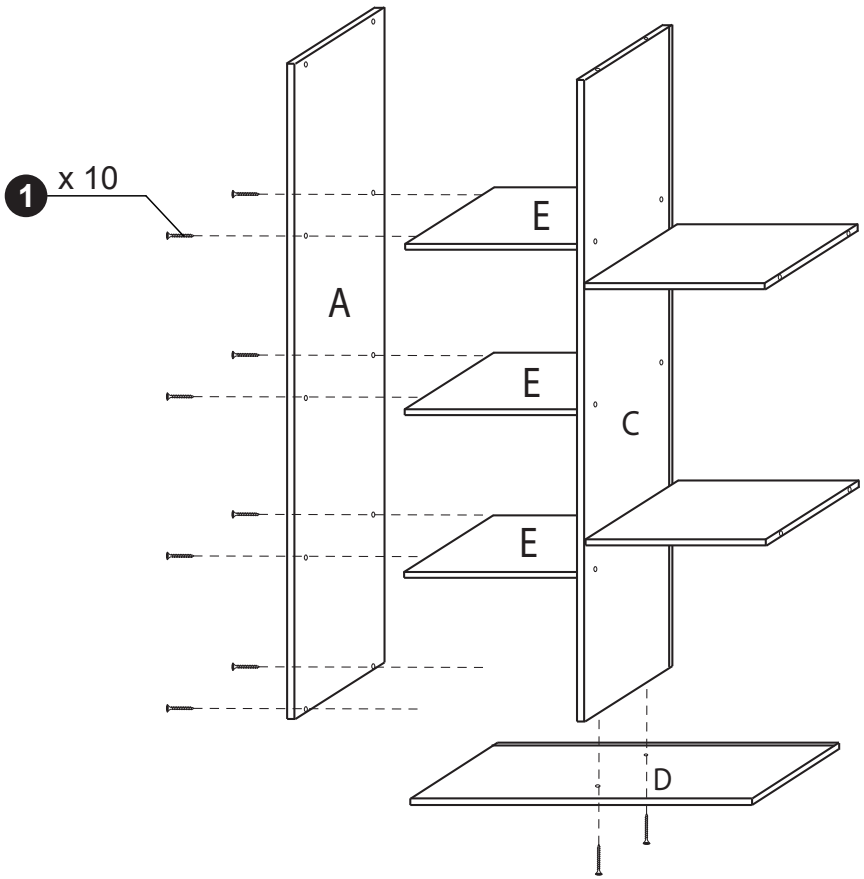

4

