12

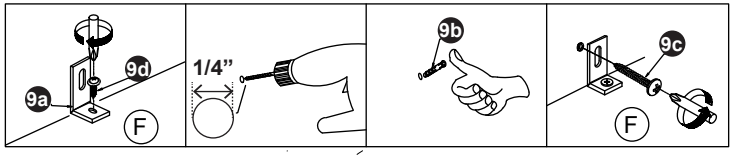

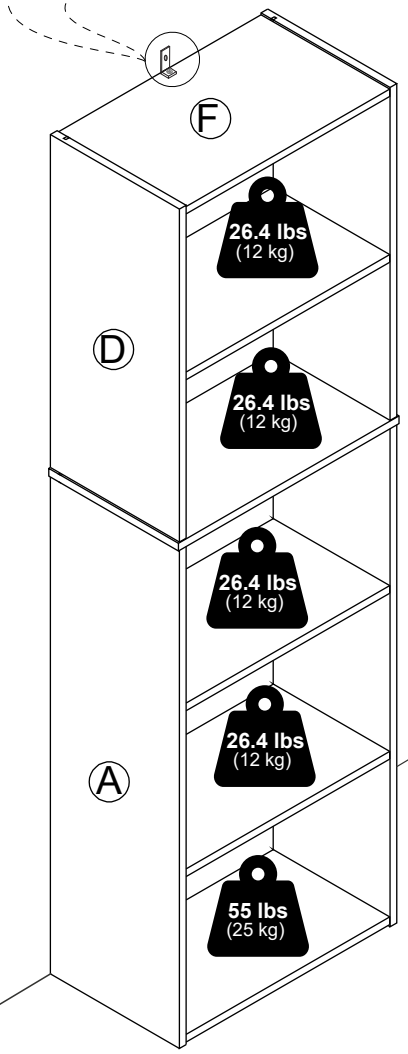

THIS PRODUCT MUST ALWAYS BE MOUNTED A WALL OR STUD FOR USE.

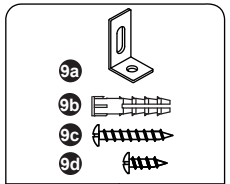

9	x 1





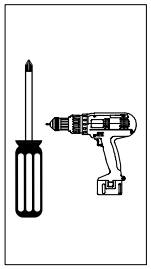

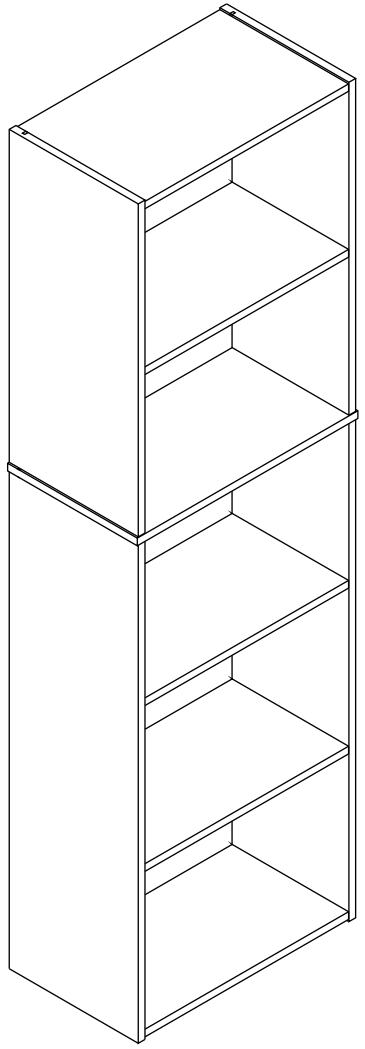

THIS PRODUCT MUST ALWAYS BE MOUNTED A WALL OR STUD FOR USE.

MODEL: 26167 (11055)

2616720260604

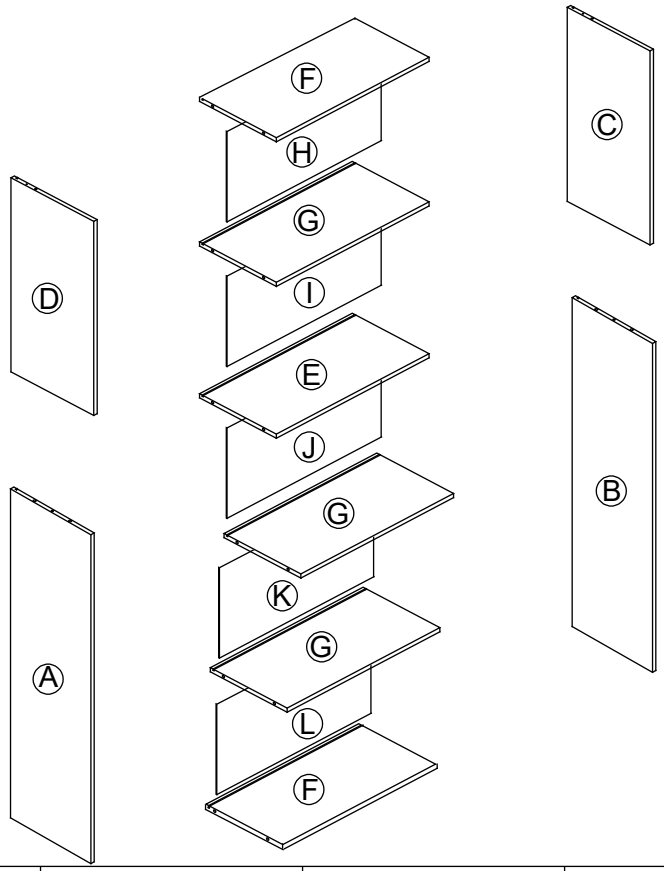

1 x 24 M4 x 32mm	2 x 8 M3.5 x 12mm	3 x 20	4 x 20 M6 x 20mm
5 x 2 M6 x 50mm	6 x 4	7 x 4	8 x 4

9 x 1

9a
9b
9c #8 x 1”
9d 4 x 11mm

9

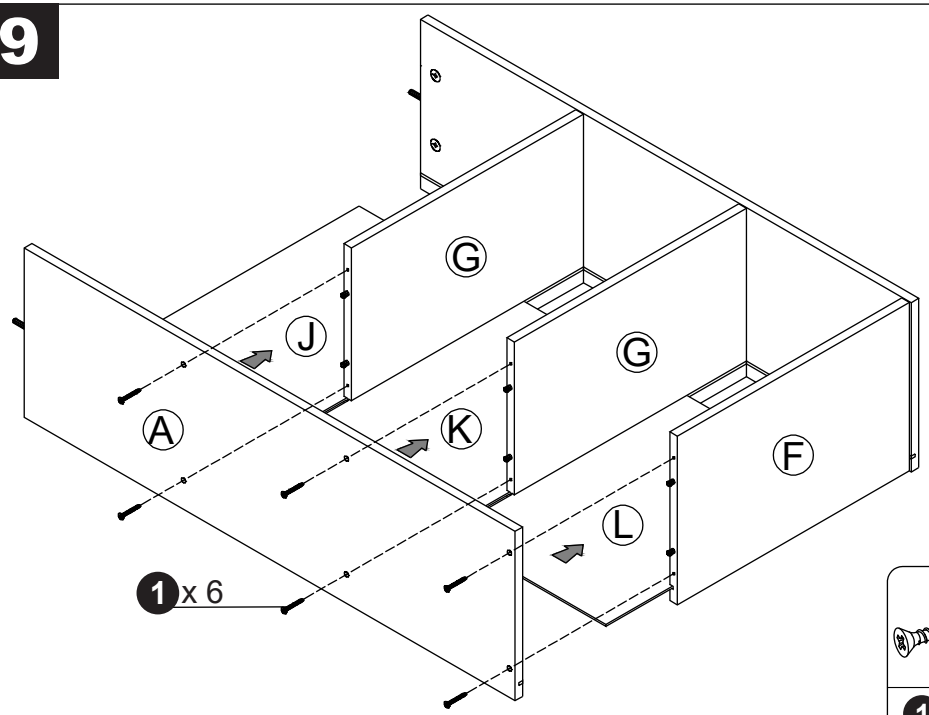

10

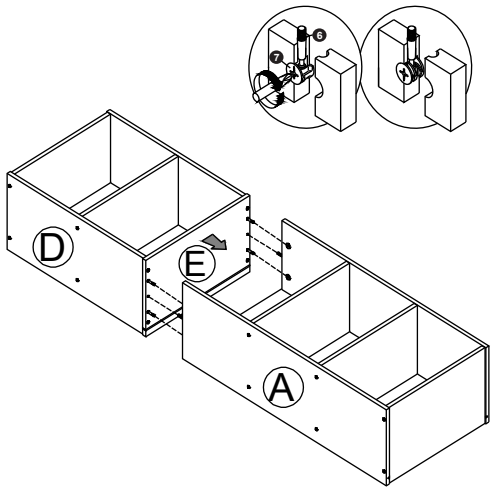

11

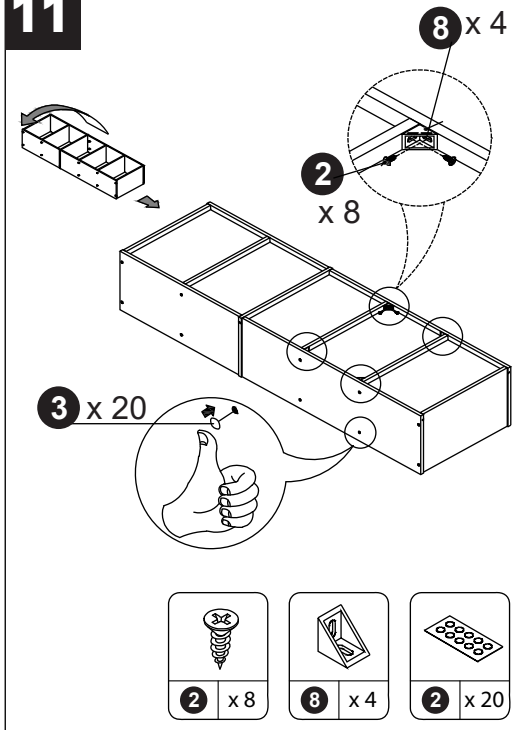

7

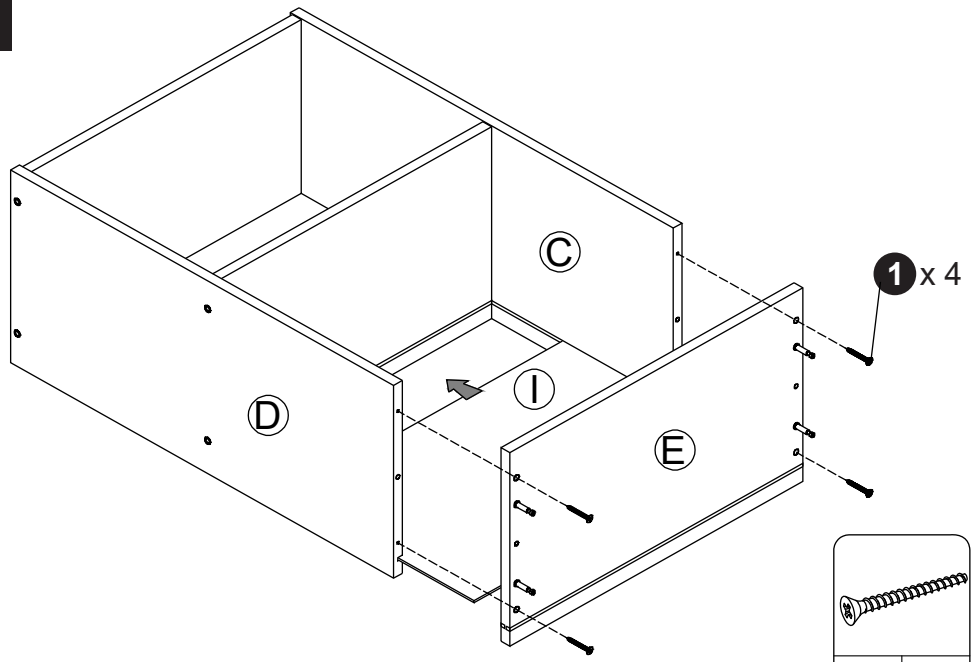

1 x 4

8

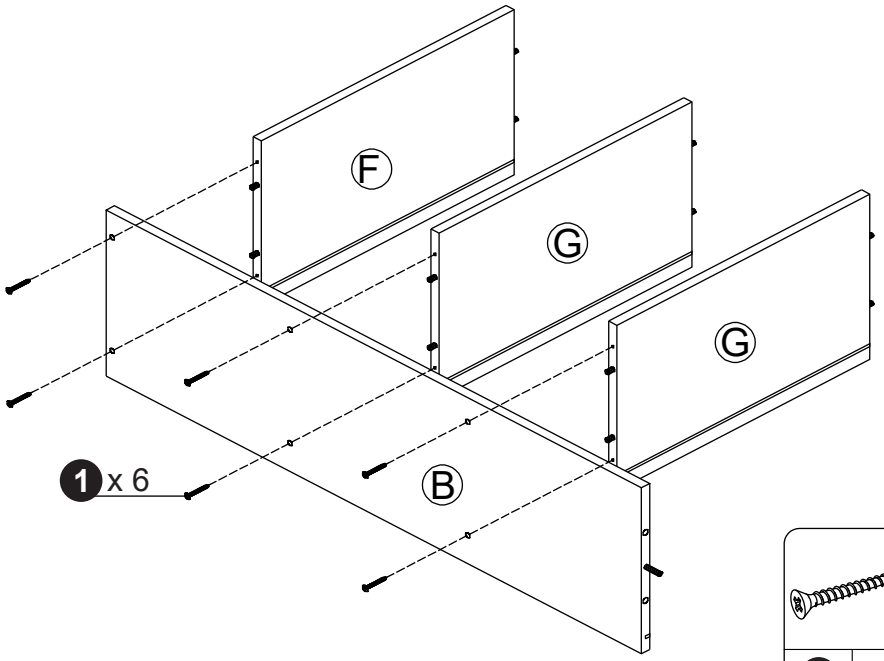

1 x 6

1

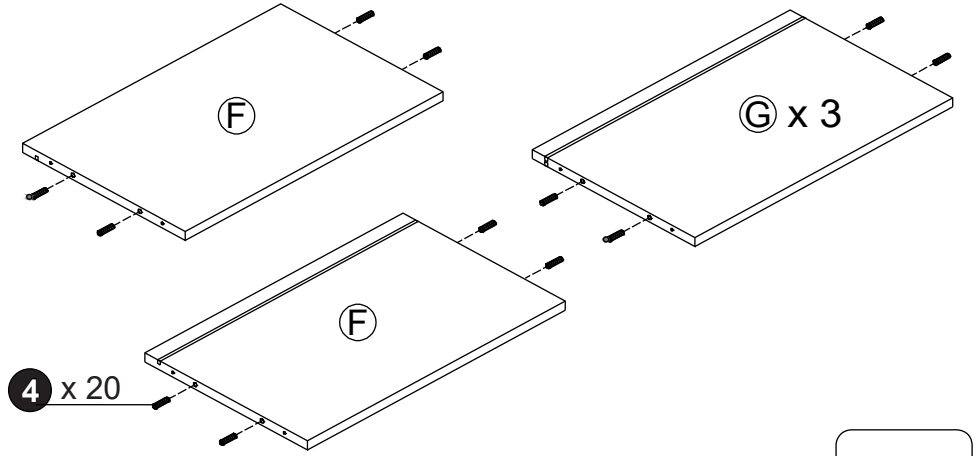

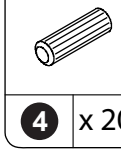

4 x 20

2

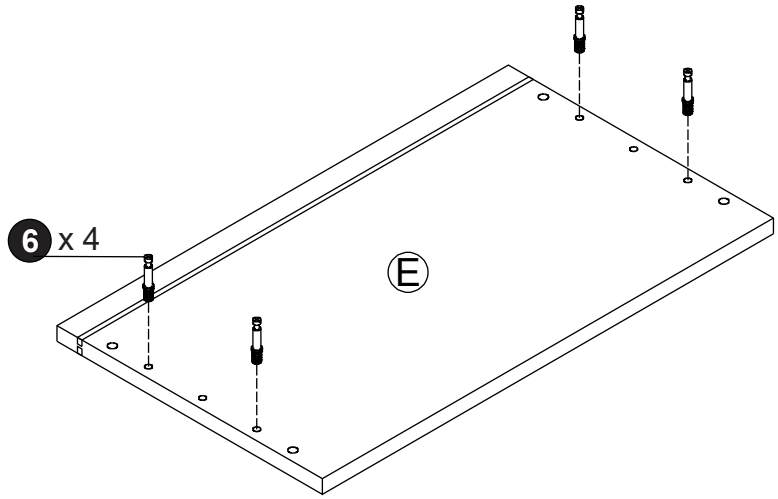

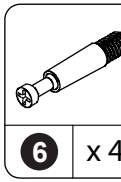

6 x 4

3

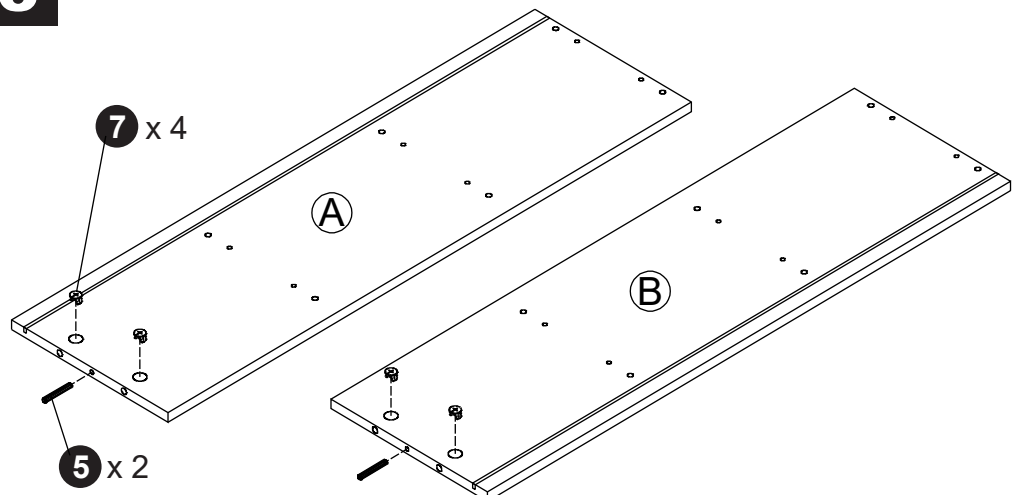

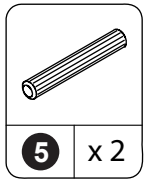

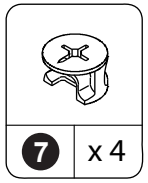

4

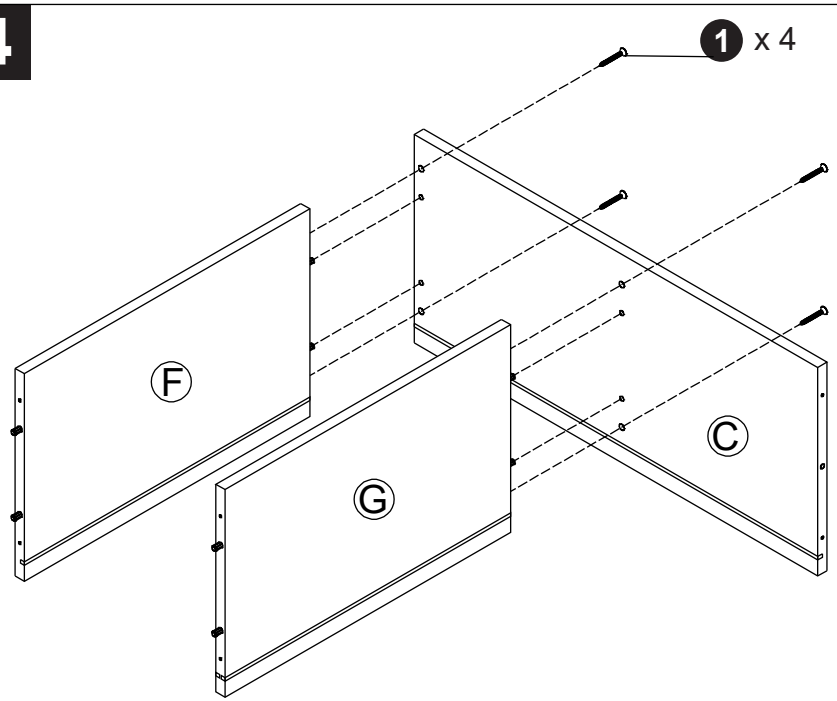

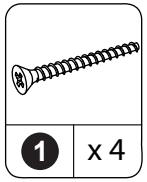

5

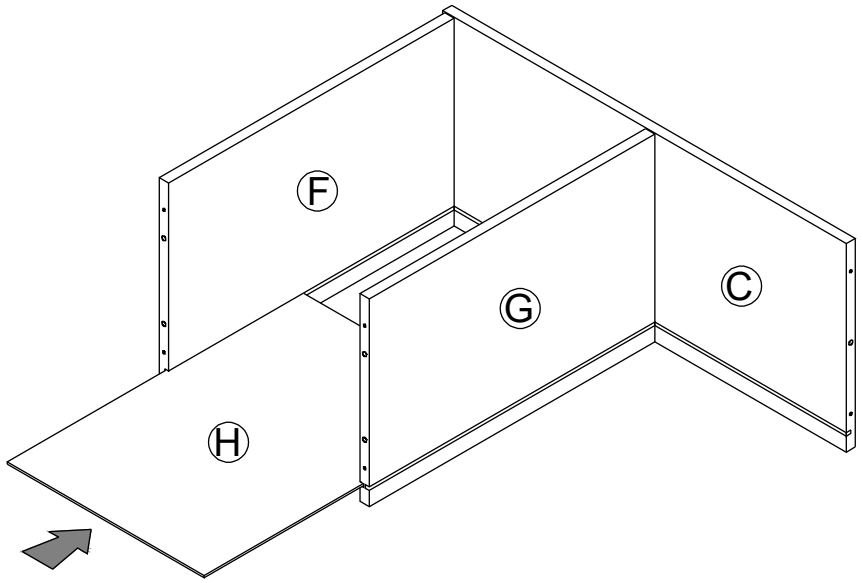

6

