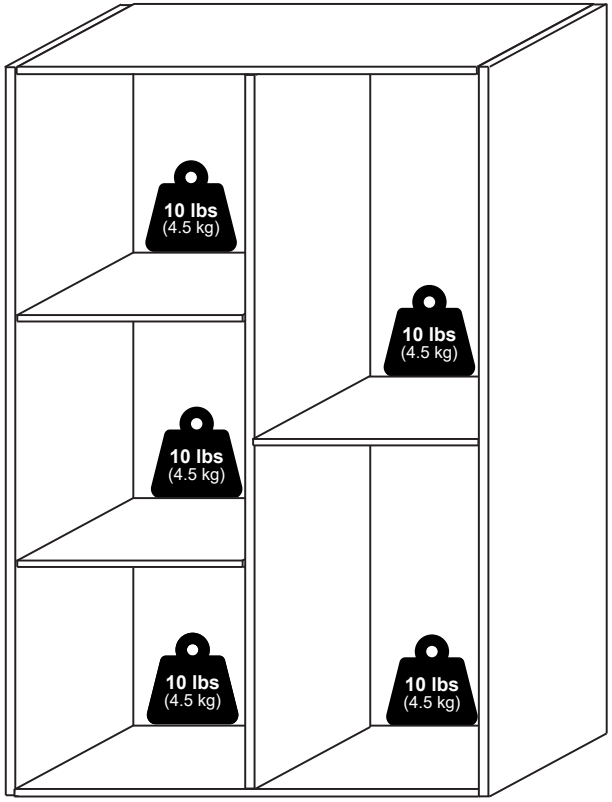

Furinno®

Fits Space, Fits Budget



00:30



x 1

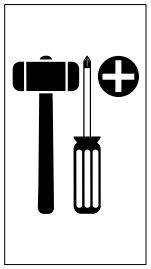

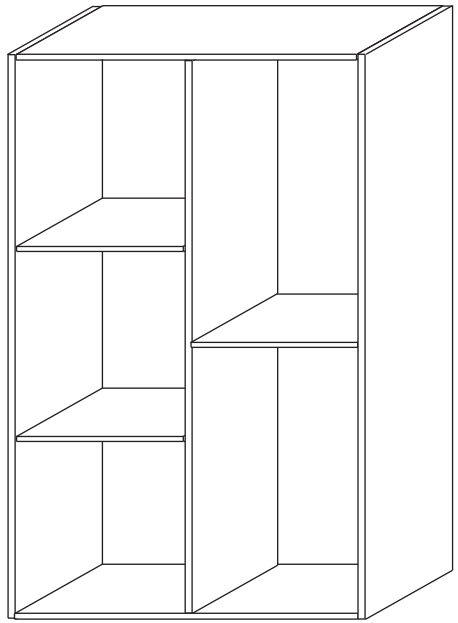

MODEL: 11069

support@furinno.com

www.furinno.com

1106920230519

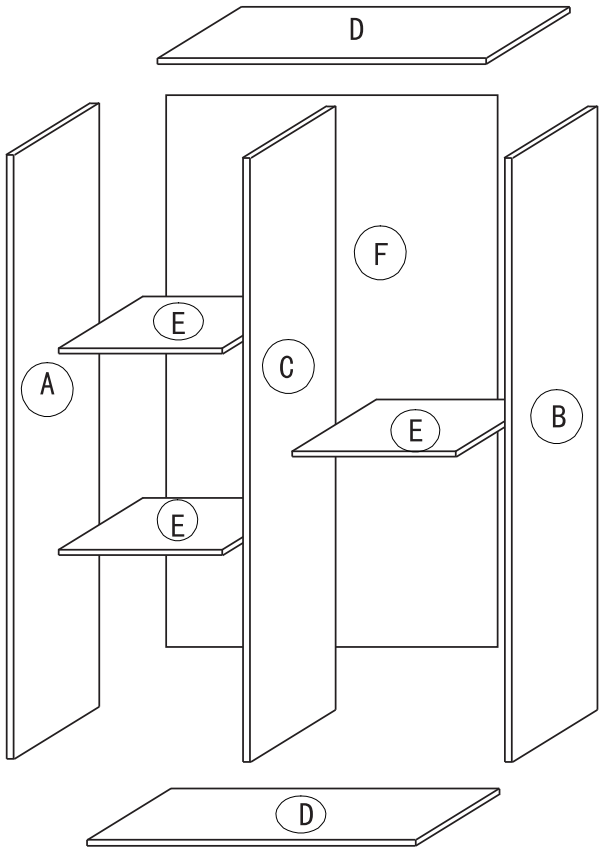

1	x 24	2	x 18	3	x 14	4	x 1
		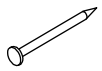				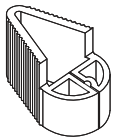	
M4 x 32mm		2.5 x 18mm		13mm			

6

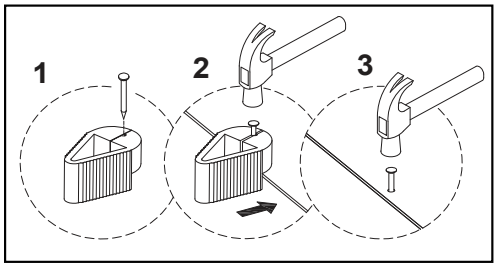

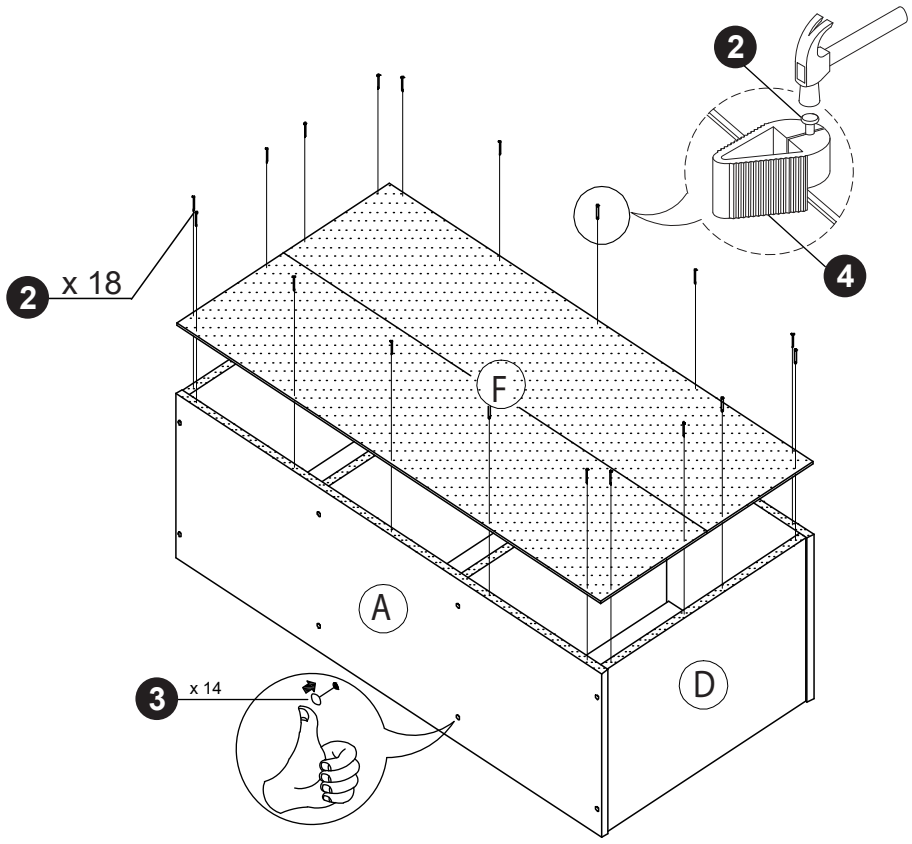

5

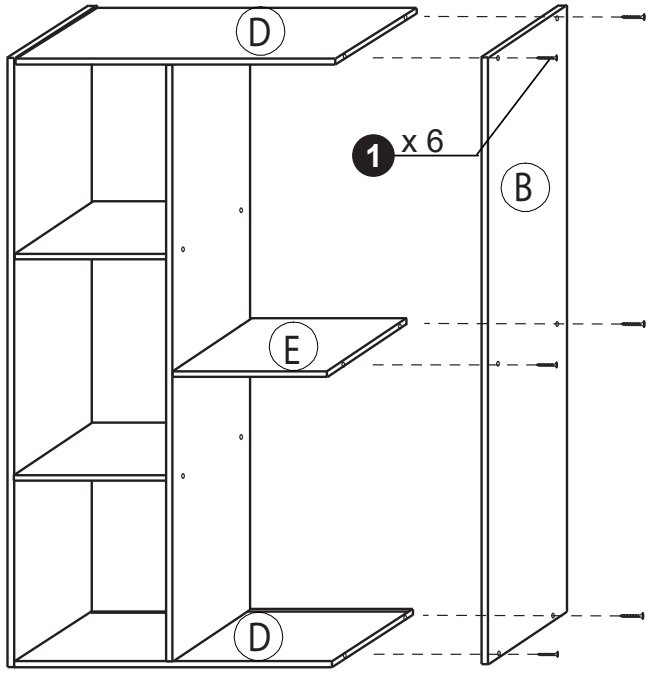

1

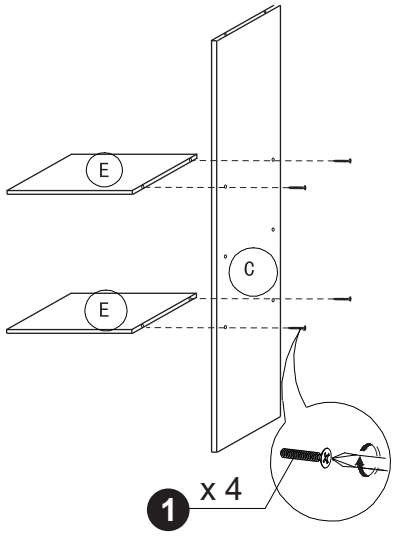

2

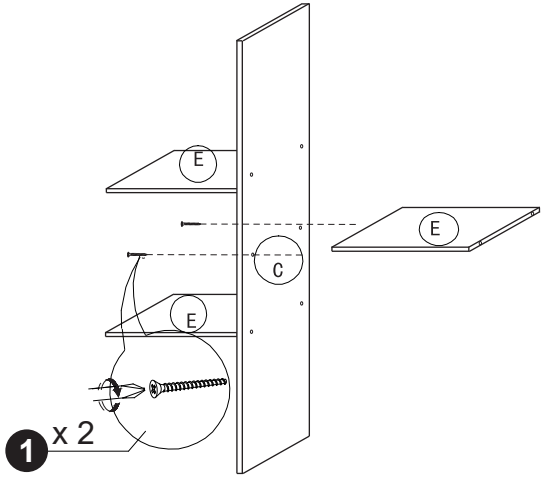

3

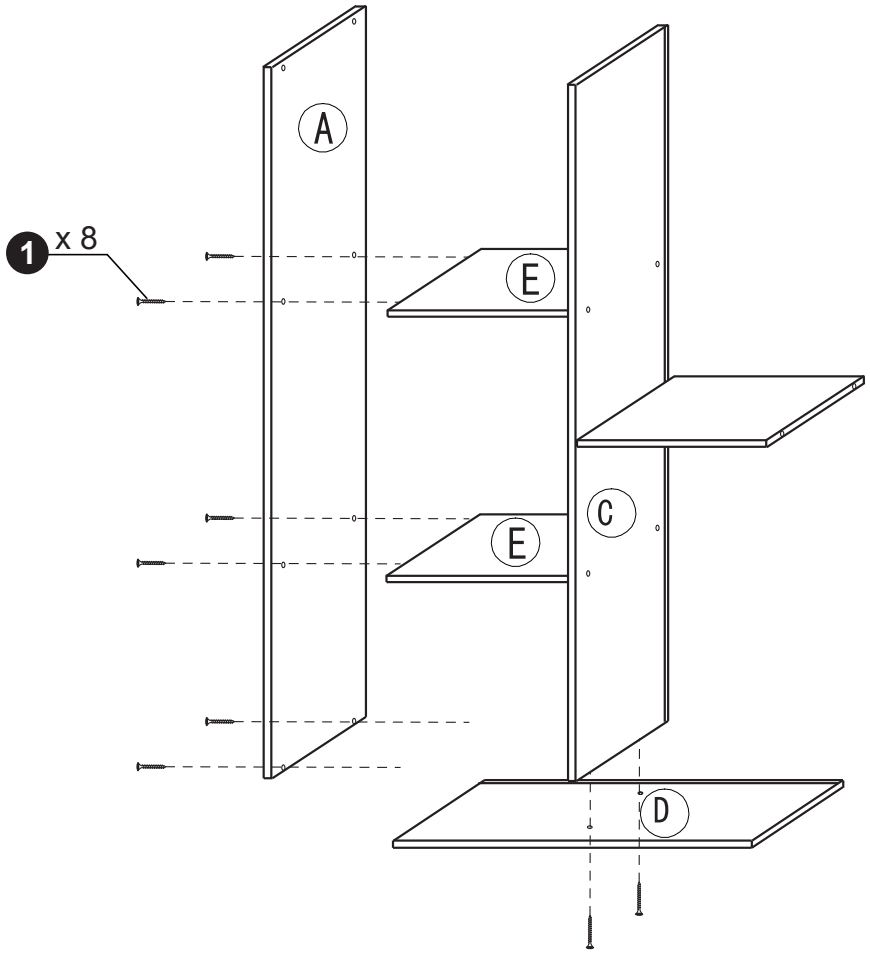

4

