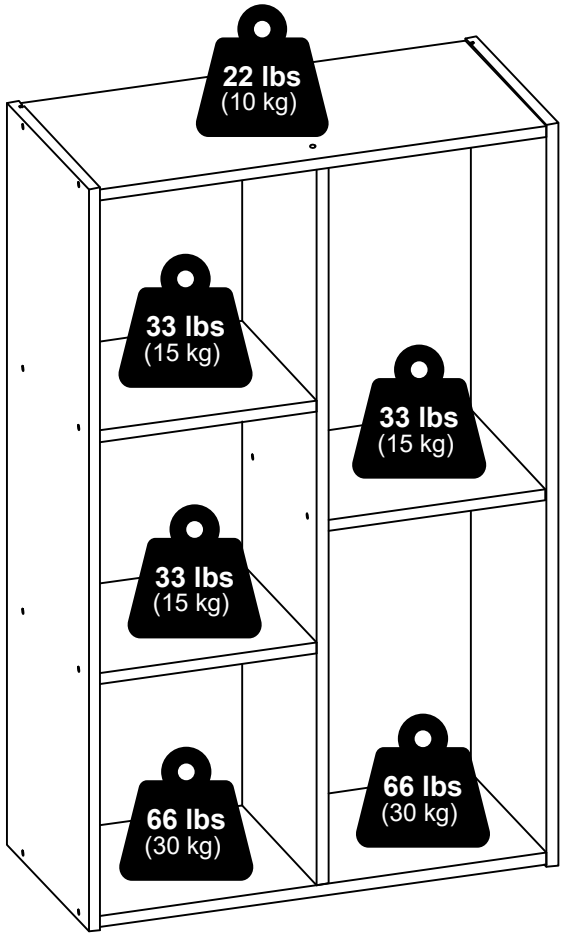



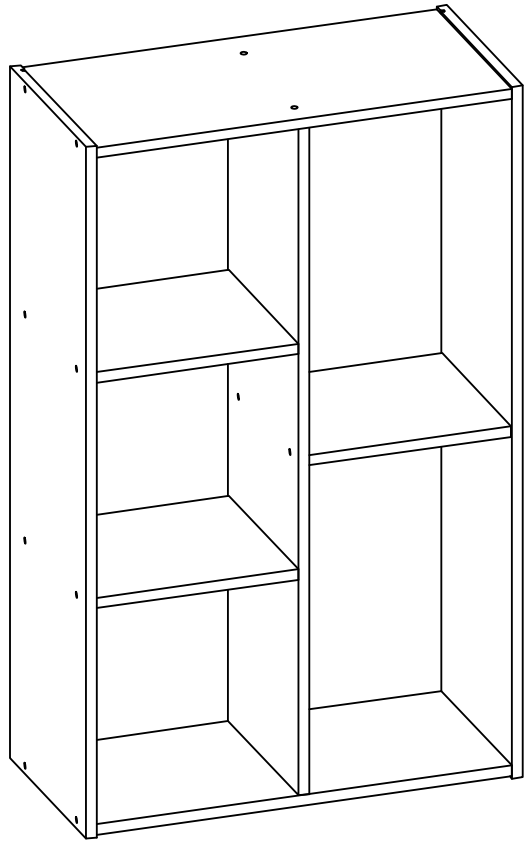

THIS PRODUCT MUST ALWAYS BE MOUNTED A WALL OR STUD FOR USE.

MODEL: 26168 (11069)

2616820260604

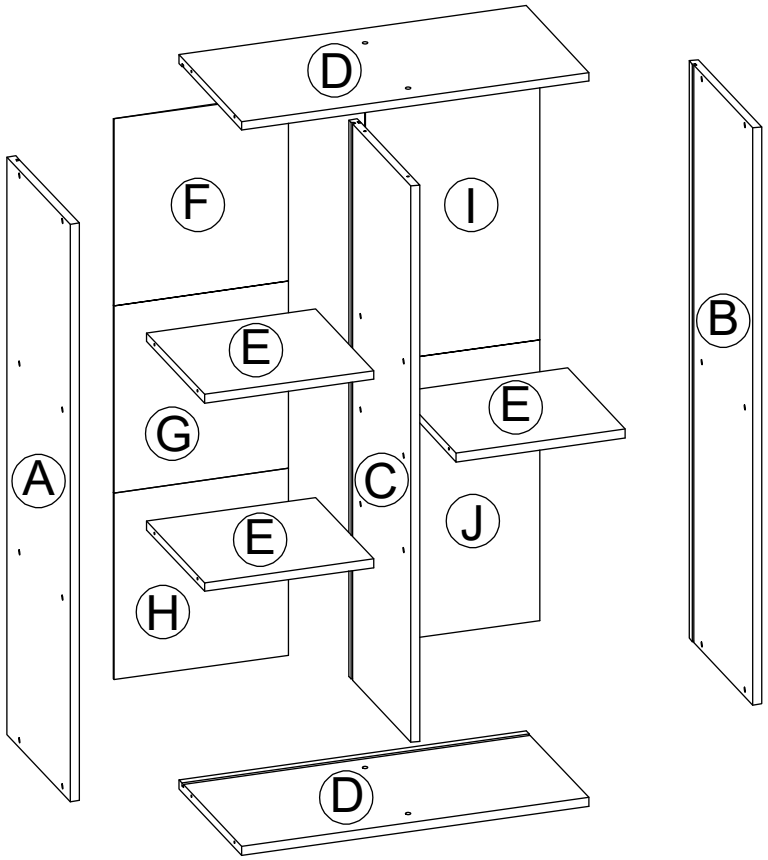

1 x 24  M4 x 32mm	2 x 14 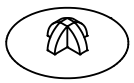	3 x 4 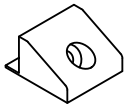
4 x 4  M3 x 16mm	5 x 1  5a 5b 5c #8 x 1" 5d 4 x 11mm	

7

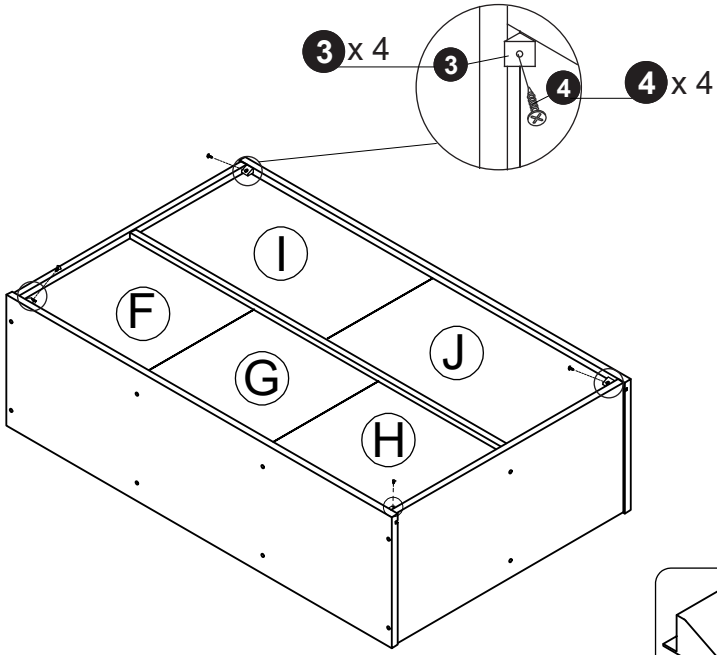

3	x 4
4	x 4

8

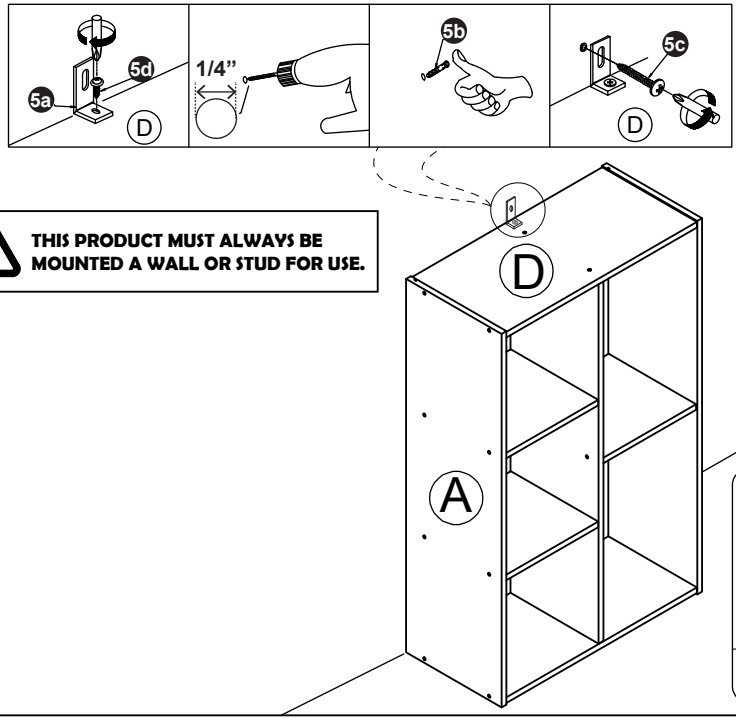

5	x 1

6

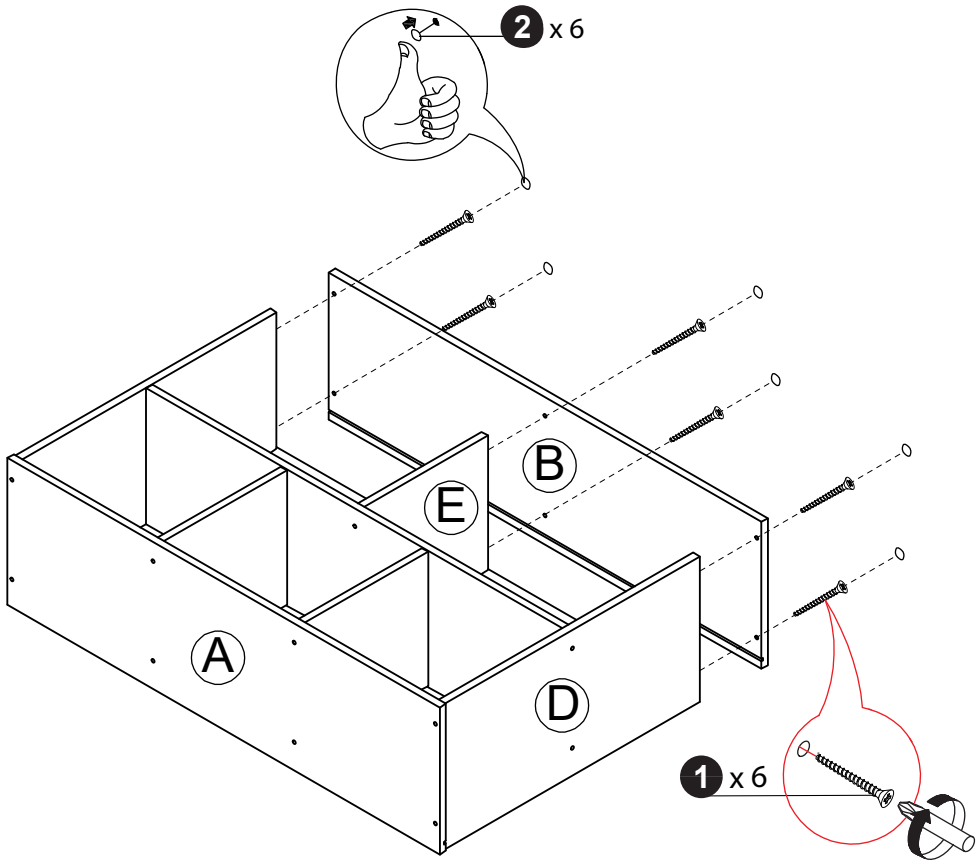

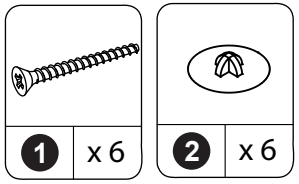

1

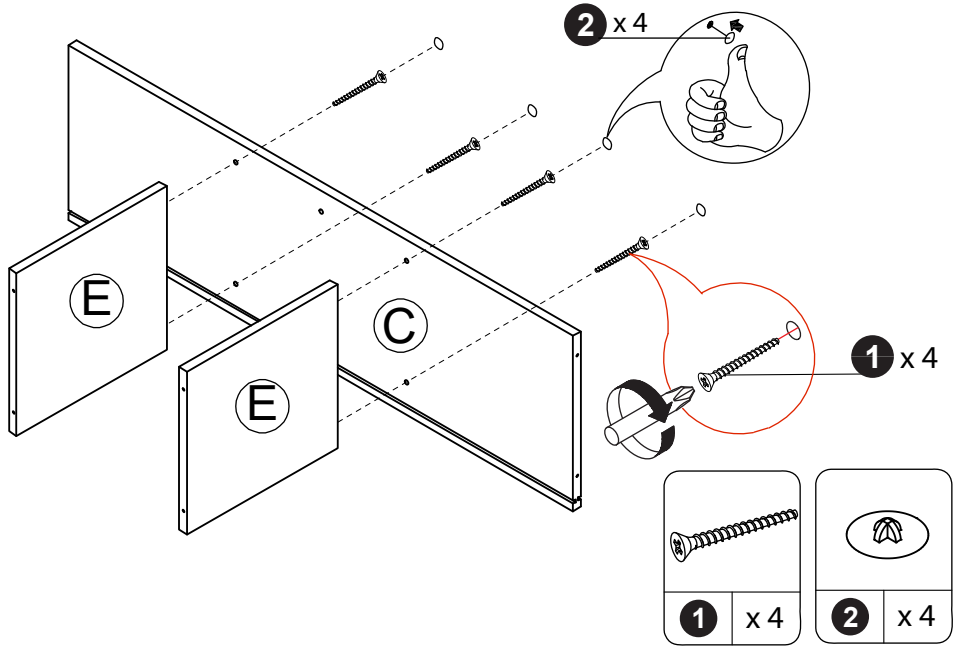

2

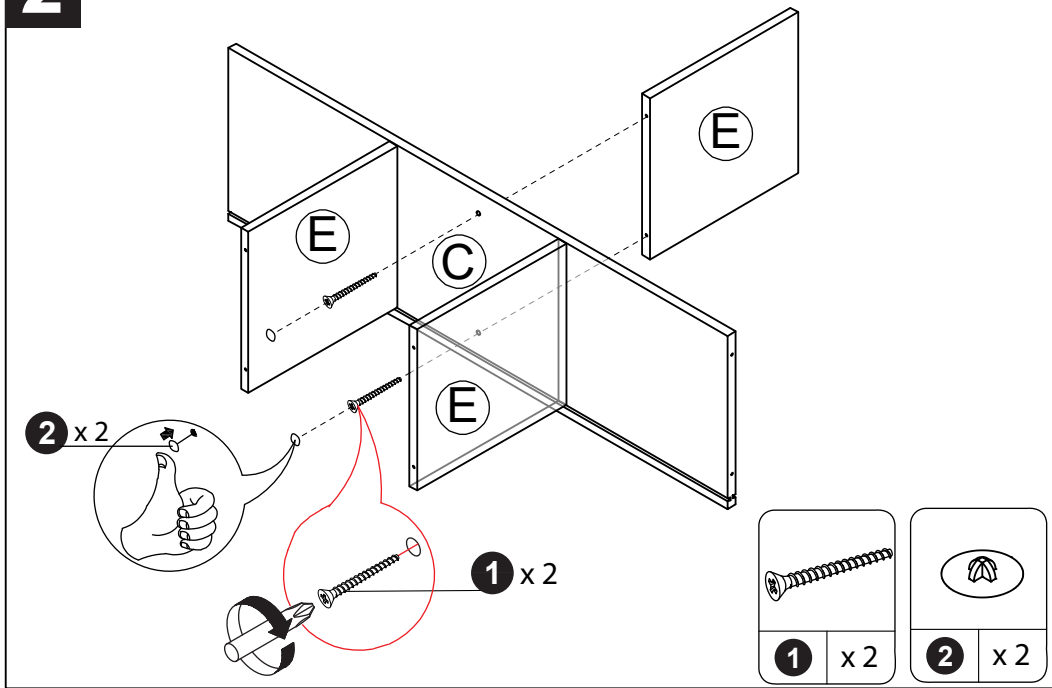

3

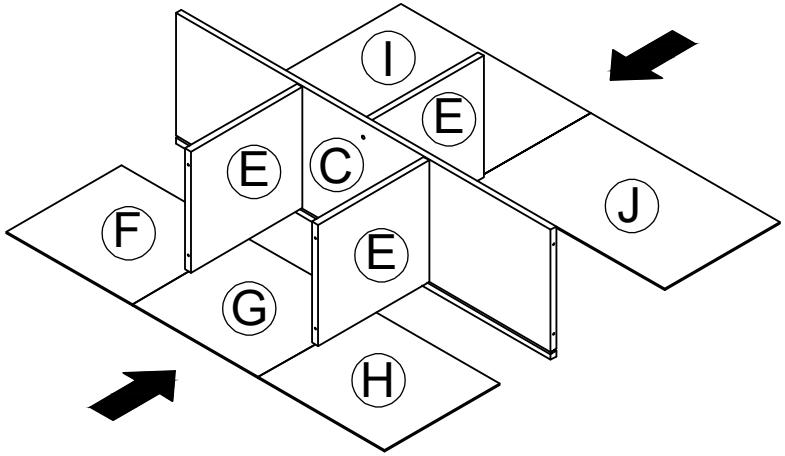

4

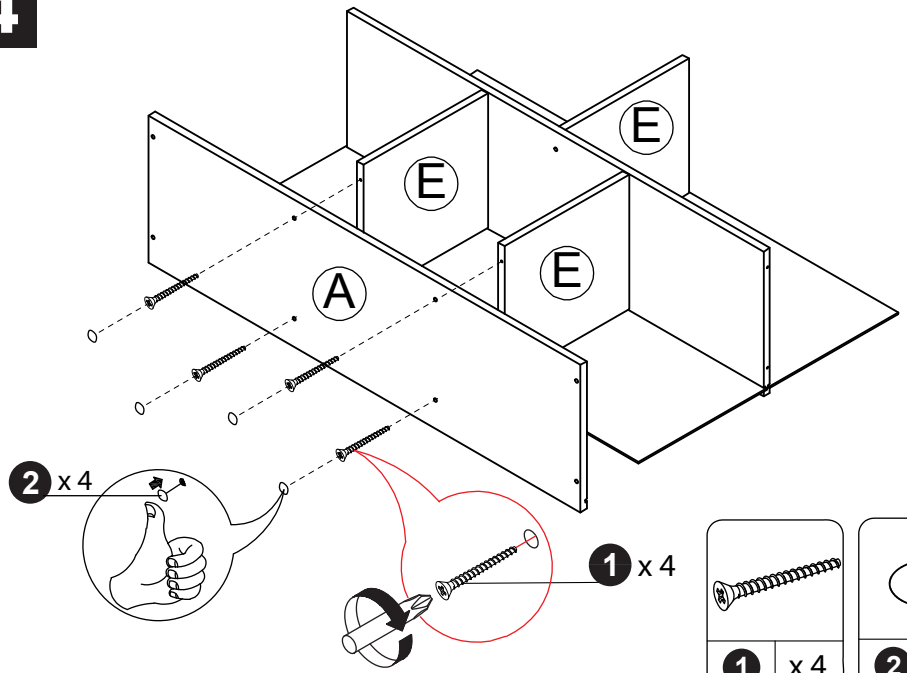

5

