## STEP 6

Install Square Leg (5) on Panel (B) with Screw (2).

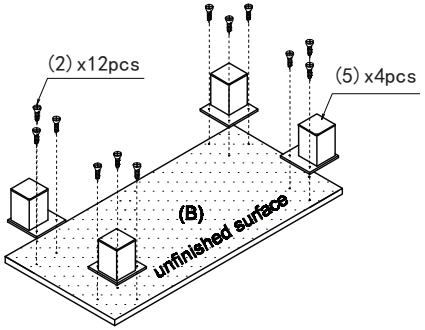


## STEP 8

Upright the unit.
Attach Back Panel (H) to the back side with Power Pin (6).

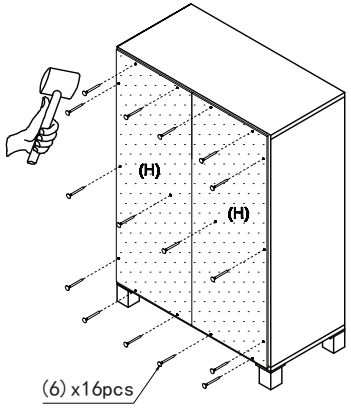


## STEP 7

Attach Bottom Panel (B) to assembled unit with Screw (1).

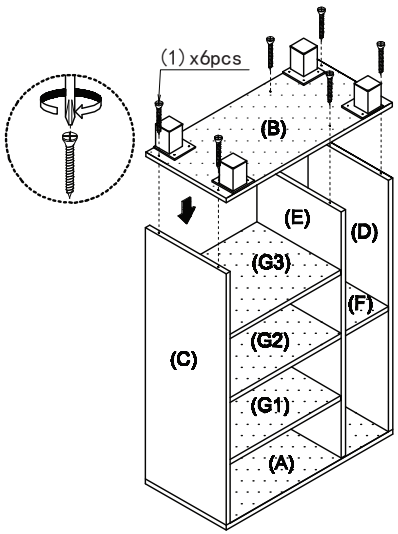


## STEP 9

Unfold the Bin (9) and slide into the storage.

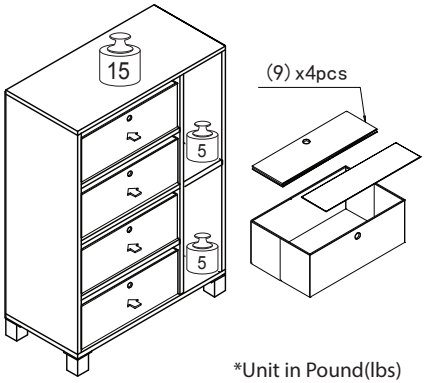


*Unit in Pound(lbs)

***WARNING:***

*>This unit has been designed to support the maximum loads shown. Exceeding these load limits could cause sagging, instability, product collapse, and/or serious injury.*

*>DO NOT allow children to climb on unit.*

*>Put heavier items on lower shelves.*

Furinno®
Fits Space. Fits Budget

# *Assembly Instruction*

Furinno Multipurpose Storage Cabinet with 4 Bin-Type Drawer

MODEL : **11159**

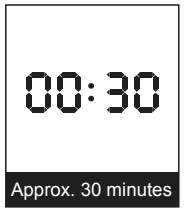








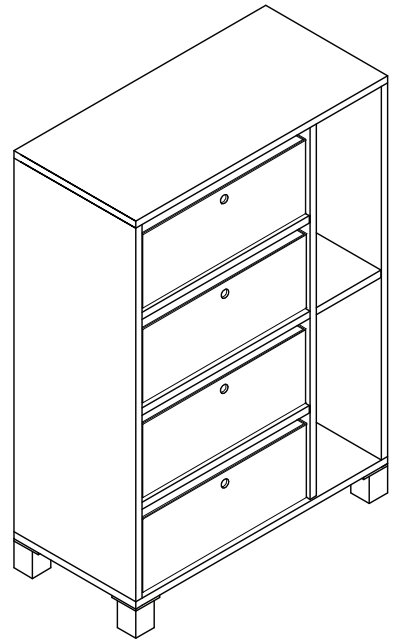

## *Customer Support*

**NEED HELP?** For replacement requests or product inquiries, please contact our Customer Service Team by emailing us at **support@furinno.com**. Thank you for selecting Furinno!

***www.furinno.com***

1115920180503

| No | Hardware List | Qty |
|---|---|---|
| 1 | Long Screw | 6pcs |
| 2 | Short Screw | 12pcs |
| 3 | Long Dowel | 2pcs |
| 4 | Short Dowel | 18pcs |
| 5 | Square Leg | 4pcs |
| 6 | Power Pin | 16pcs |
| 7 | Cam-Lock Nut | 6pcs |
| 8 | Cam-Lock Screw | 6pcs |
| 9 | Bin | 4pcs |

| No | Parts List | Qty |
|---|---|---|
| A | Top Panel | 1pc |
| B | Bottom Panel | 1pc |
| C | Left Side Panel | 1pc |
| D | Right Side Panel | 1pc |
| E | Center Panel | 1pc |
| F | Short Shelf Panel | 1pc |
| G | Long Shelf Panel (G1)(G2)(G3) | 3pcs |
| H | Back Panel | 2pcs |

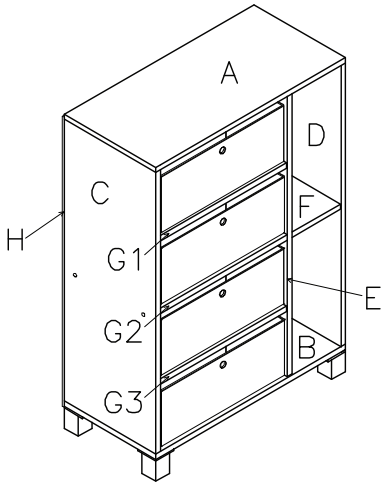


**USEFUL HINTS BEFORE YOU START:**

1. Read each step carefully before starting.
2. It is important that each step is performed in correct order to avoid difficulties.
3. Identify, sort and count the parts before assembly.
4. Assemble your furniture on packaging cardboard to prevent scratch or damage.
5. Clean the product with mild cleanser using soft damped cloth. Do not use harsh or abrasive cleanser.
6. Using uncompatible hardware might cause damage to product.

## STEP 1

Insert Dowel (4) to Panel (G1)(G2)(G3).
Insert Dowel (3)&(4) to Panel (F).

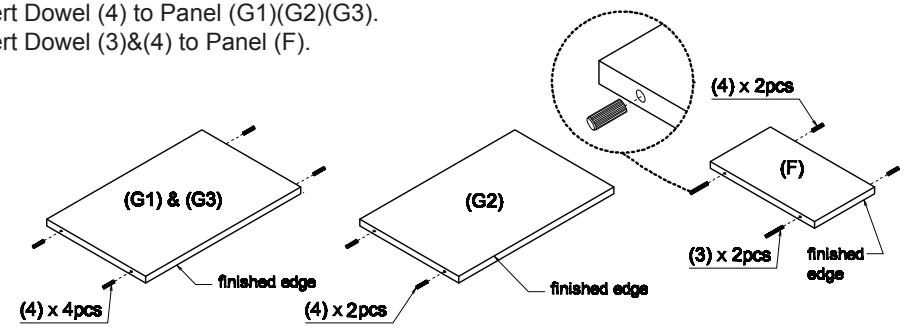


## STEP 2

Insert Cam-Lock Nut (7) and Dowel (4) into Panel (C)(D)(E).
**Arrow on Cam-Lock Nut should be pointing toward hole.**

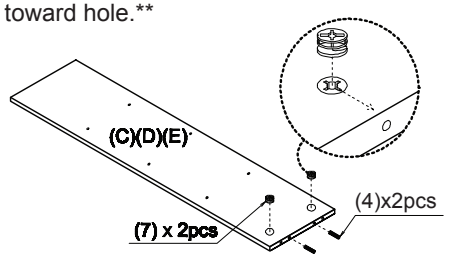


## STEP 3

Attach Shelf Panel (G) to Panel (C)&(E).
Attach Panel (F) to Panel (E)&(D).

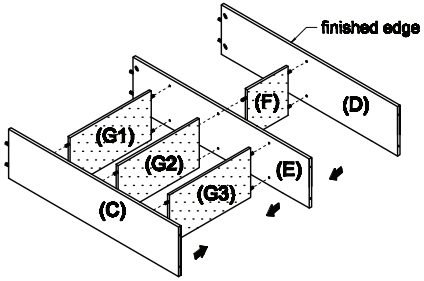


## STEP 4

Screw Cam-Lock Screw (8) into the pre-drilled holes on Panel (A).

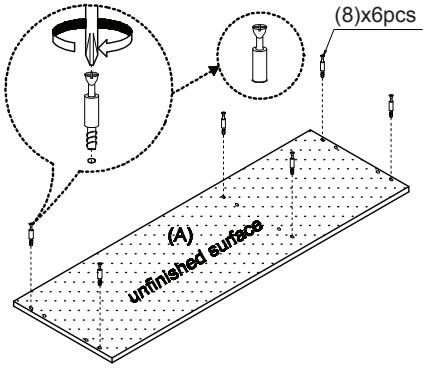


## STEP 5

Attach assembled unit to Panel (A) and tighten Cam-Lock Nut( 7) using screwdriver.

