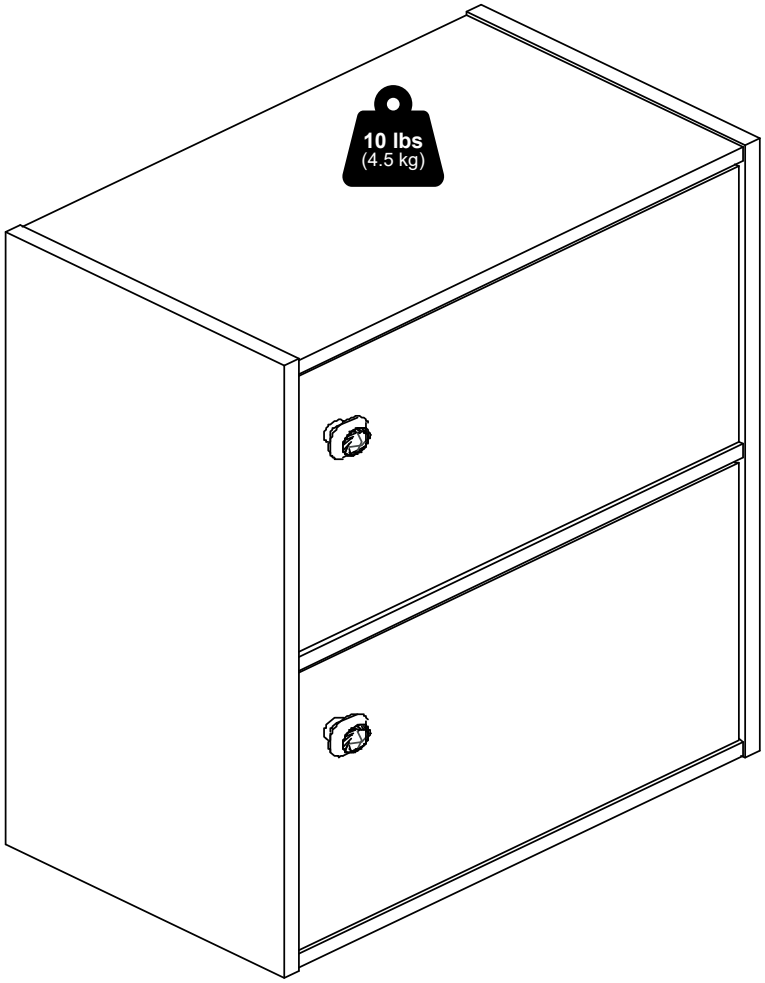




Furinno®

Fits Space, Fits Budget




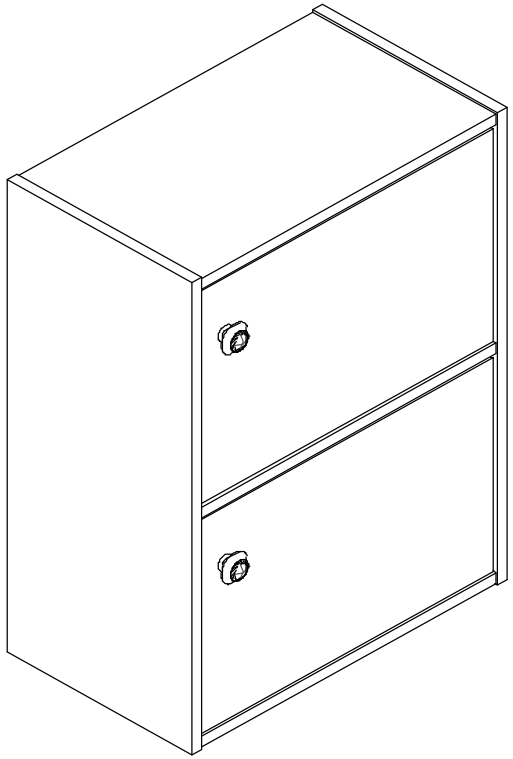

**MODEL: 11201**

support@furinno.com

www.furinno.com



1120120230530

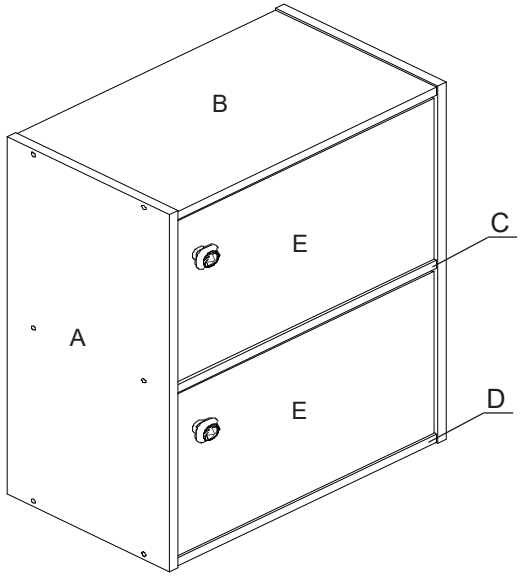


| | | | |
|---|---|---|---|
| 1 x 12<br>M4 x 32mm | 2 x 4<br>6mm | 3 x 2 | 4 x 2<br>M5 x 6mm |
| 5 x 2 | 6 x 2<br>M3.5 x 20mm | 7 x 16<br>2.5 x 18mm | 8 x 1 |



## 7

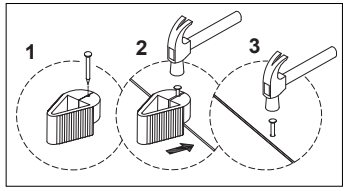


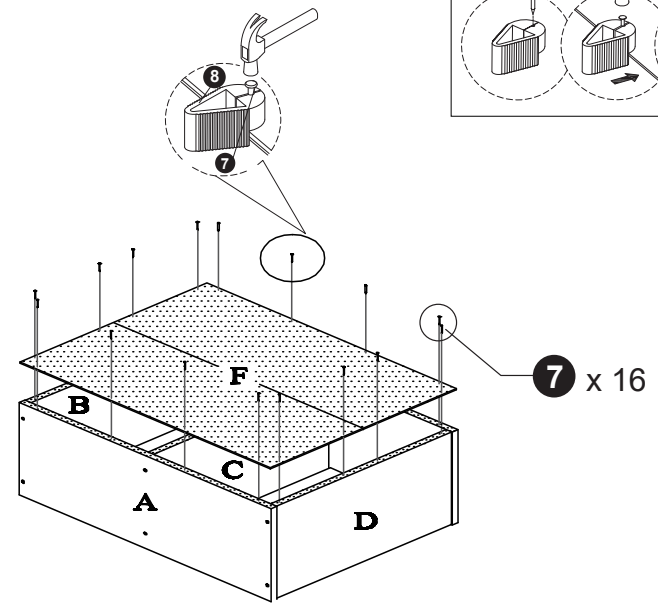


## 8

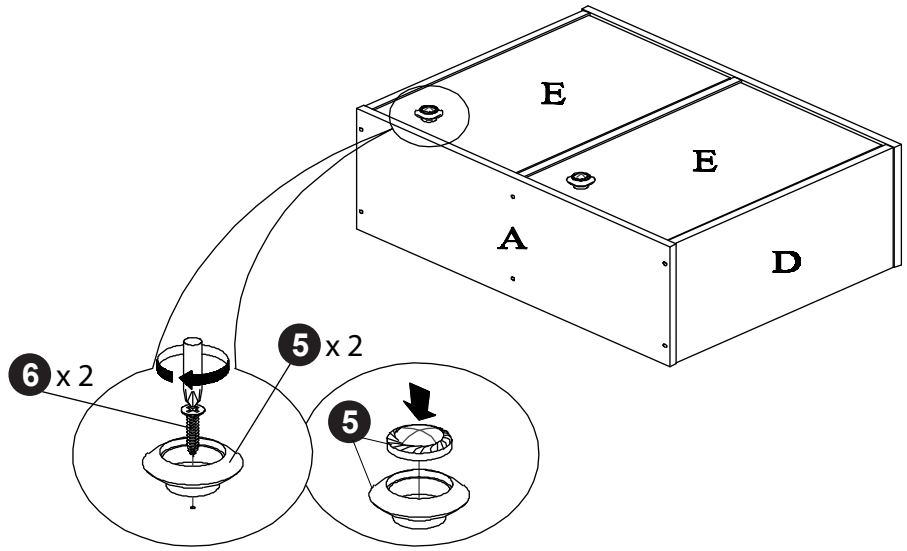

## 5

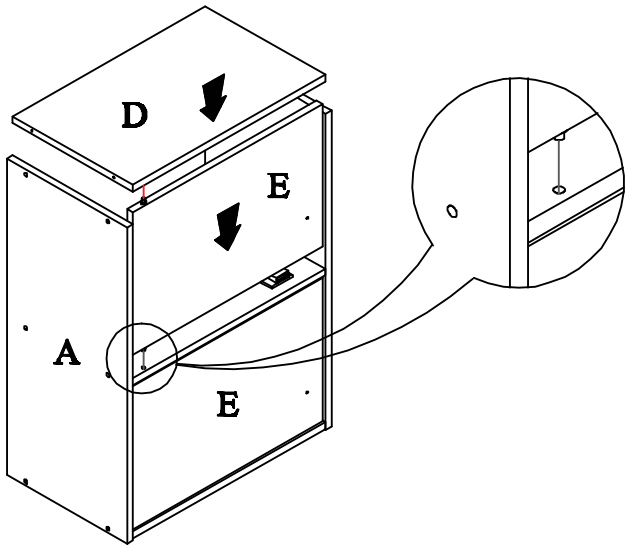


## 6

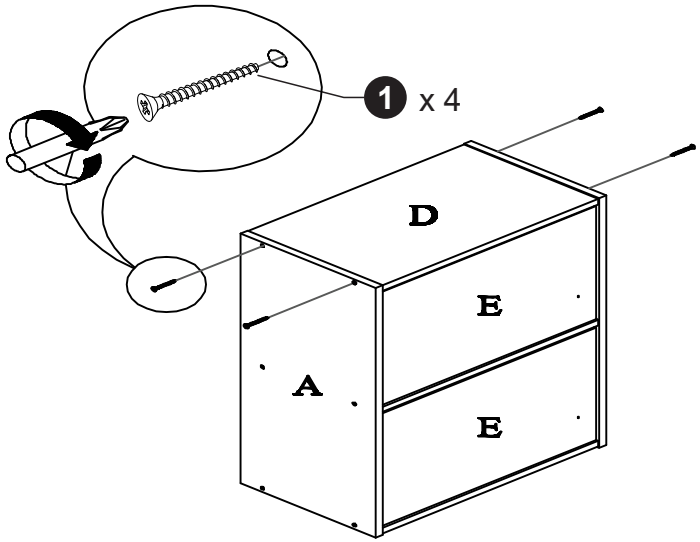




## 1

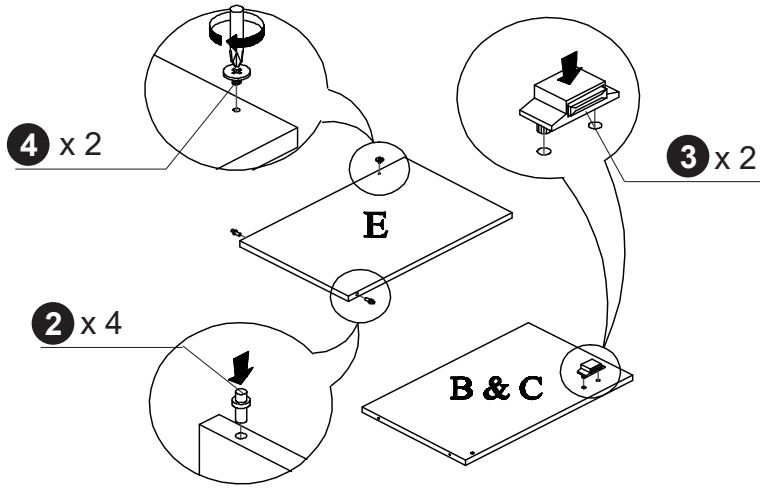


## 2

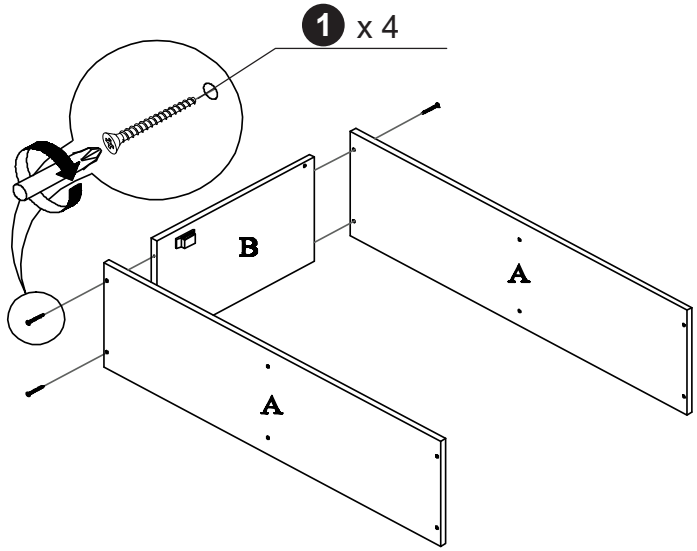

# 3

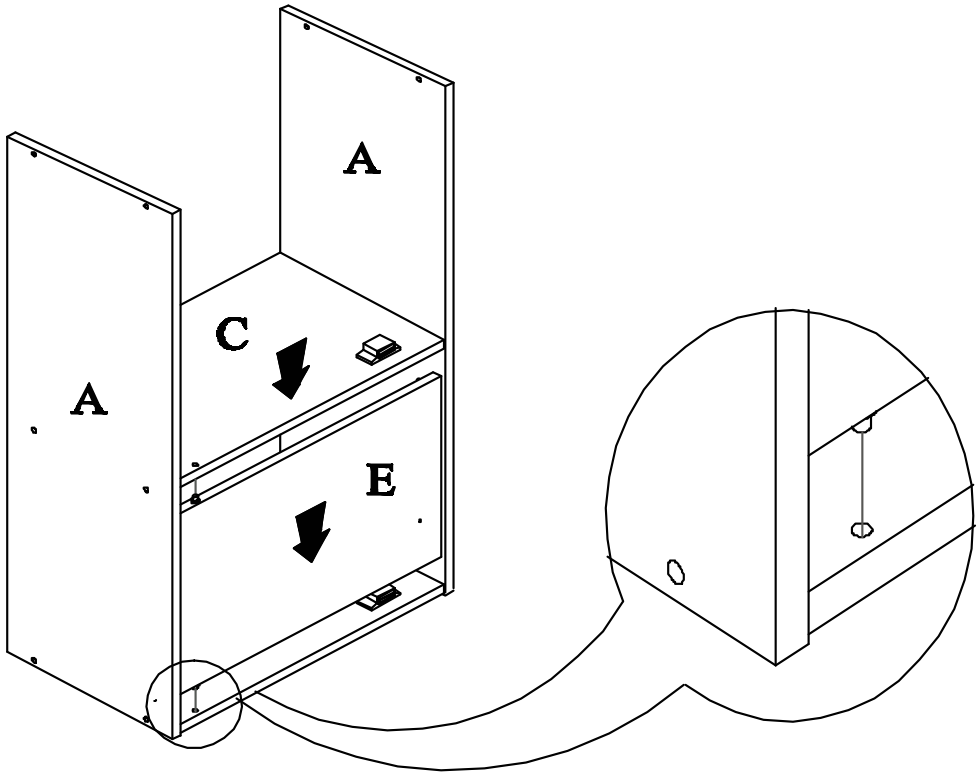




# 4

