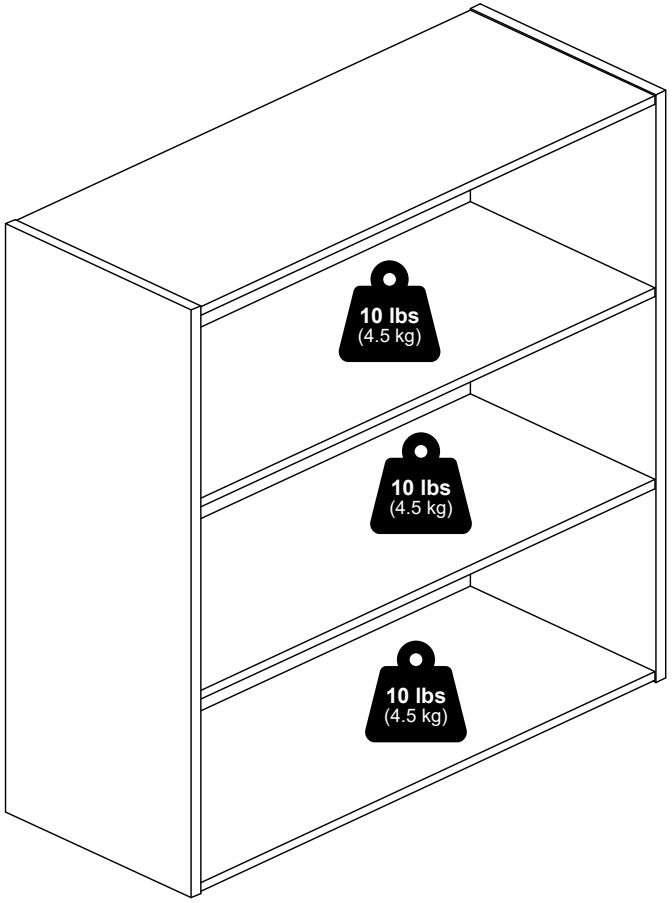

Furinno®

Fits Space, Fits Budget



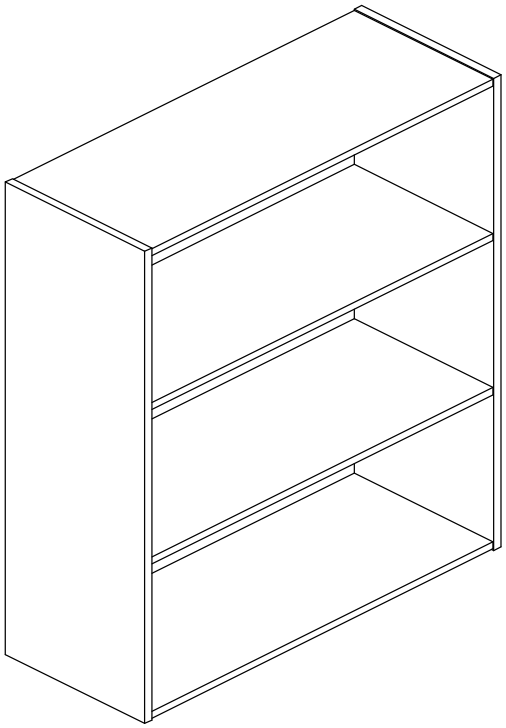

MODEL: 11208

support@furinno.com

www.furinno.com

1120820230519

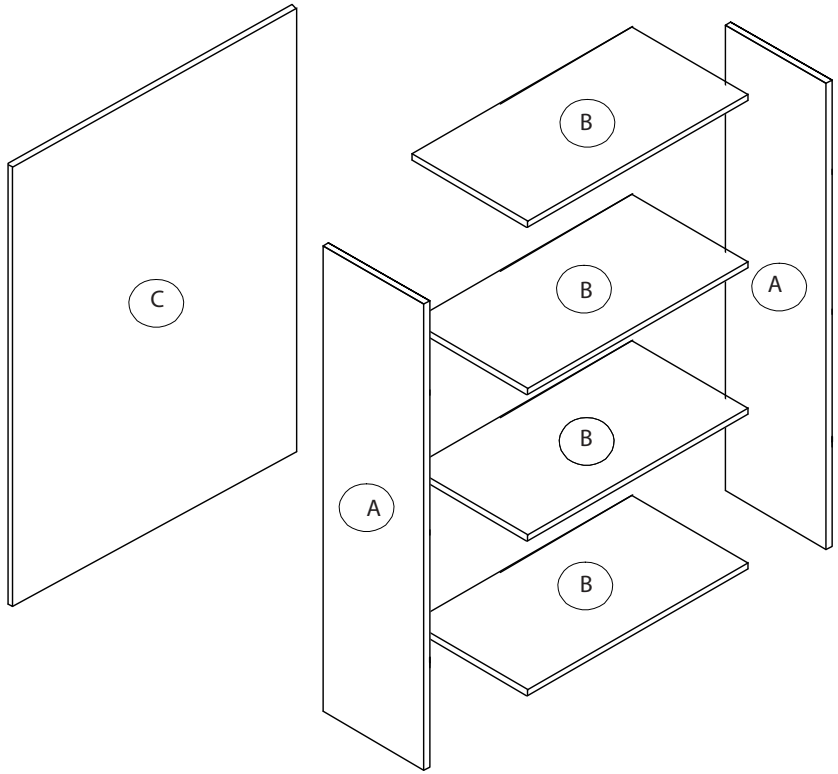

1	x 16	2	x 22	3	x 1
		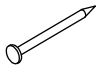		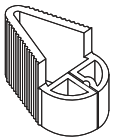	
M4 x 32mm		2.5 x 18mm			

1

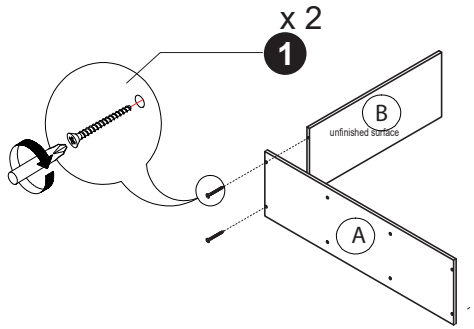

2

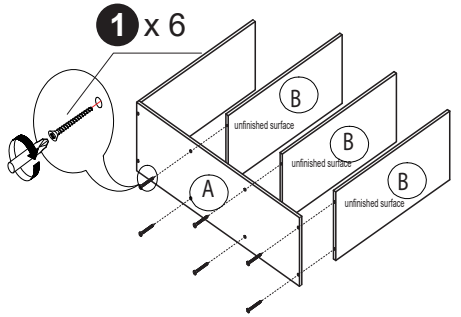

3

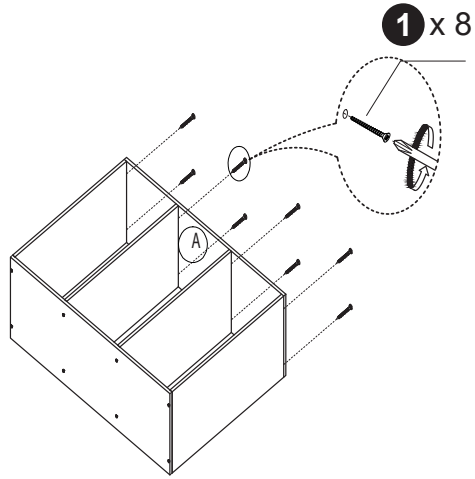

4

