STEP 7

REINFORCE PANEL (B) TO PANEL (D) & (E) WITH SCREW (3).

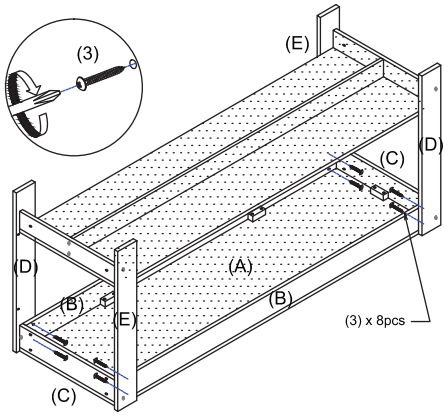

STEP 8

ATTACH PANEL (F) & (G) TO PANEL (D) & (E) WITH DOWEL (4).

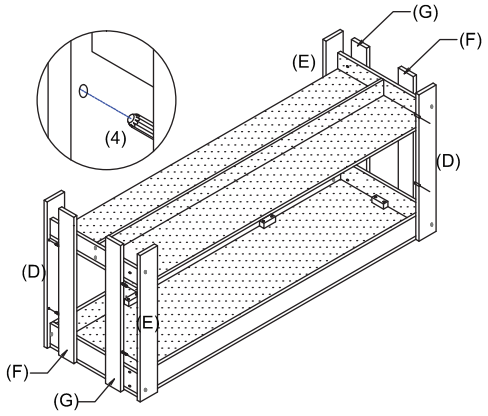

STEP 9

REINFORCE PANEL (F) & (G) TO PANEL (C) & (H) WITH SCREW (3).

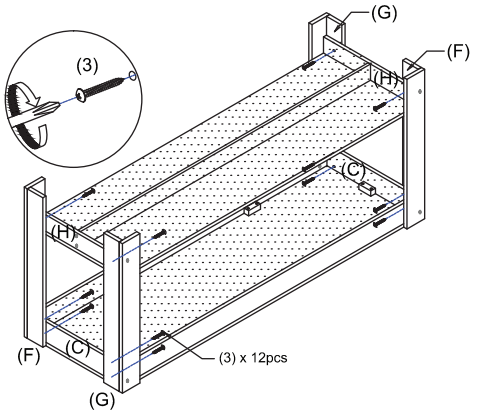

STEP 10

UPRIGHT THE ENTERTAINMENT CENTER.
COVER THE SCREW POSITION WITH SCREW CAP (6).

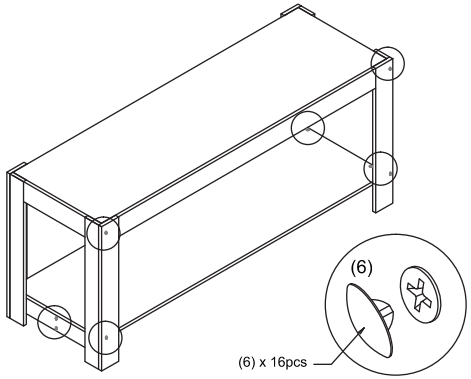

STEP 11

IT IS STRONGLY RECOMMENDED THAT THE ENTERTAINMENT CENTER IS FIXED TO A WALL.
USING WALL MOUNTING SET (7), ATTACH THE L-BRACKET TO THE TOP OF THE ENTERTAINMENT CENTER WITH SHORT SCREW. DRILL A HOLE SMALLER THAN THE ANCHOR PLUG, INSERT THE ANCHOR PLUG INTO THE HOLE USING A RUBBER MALLET UNTIL THE ANCHOR PLUG IS FLUSH WITH THE WALL, THEN FASTEN IT WITH LONG SCREW.

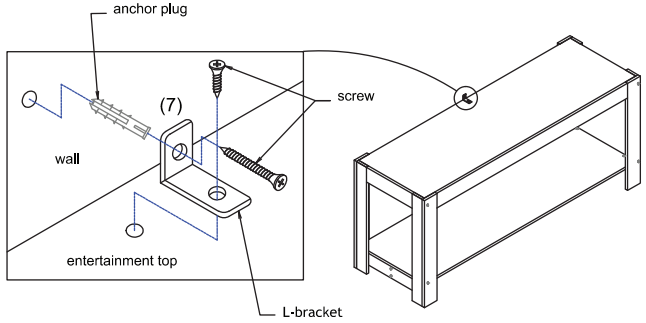

Furinno®
Fits Space. Fits Budget

Assembly Instruction

Furinno Parsons Entertainment Center
TV Stand/Coffee Table

MODEL : **12125**

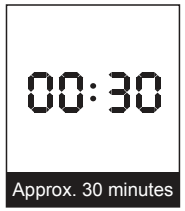





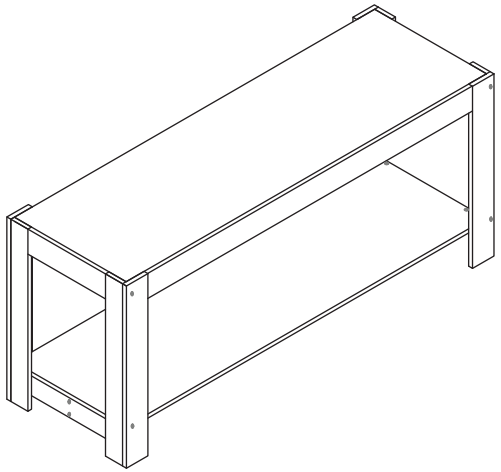

Customer Support

NEED HELP? For replacement requests or product inquiries, please contact our Customer Service Team by emailing us at **support@furinno.com**. Thank you for selecting Furinno!

www.furinno.com

1212520190212

No	Hardware List	Qty
1	Chipboard Screw (M4x38mm)	20pcs
2	Chipboard Screw (M4x25mm)	12pcs
3	PH Tapping Screw (#8 x 3/4")	20pcs
4	Dowel	16pcs
5	Bracket 45mm	6pcs
6	Screw Cap Cover	16pcs
7	Wall Mounting Set	1set

No	Parts List	Qty
A	Top Panel	1pc
B	Front/Back Support Panel	2pcs
C	Side Support Panel	2pcs
D	Left Leg Panel	2pcs
E	Right Leg Panel	2pcs
F	Left Leg Apron Panel	2pcs
G	Right Leg Apron Panel	2pcs
H	Leg Support Panel	2pcs
I	Leg Center Support Panel	1pc
J	Shelf Panel	1pc

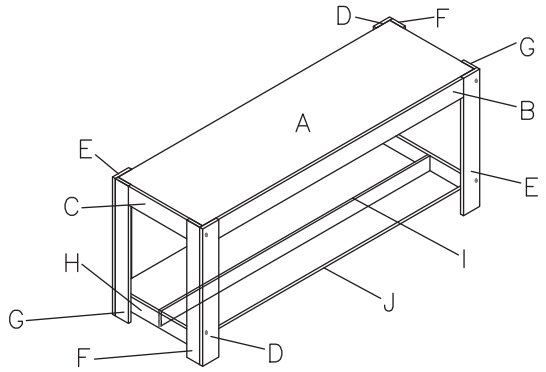

USEFUL HINTS BEFORE YOU START:

1. Read each step carefully before starting.
2. It is important that each step is performed in correct order to avoid difficulties.
3. Identify, sort and count the parts before assembly.
4. Assemble your furniture on packaging cardboard to prevent scratch or damage.
5. Clean the product with mild cleanser using soft damped cloth. Do not use harsh cleanser.
6. Using uncompatible hardware might cause damage to product.

STEP 1

INSERT BRACKET (5) TO PANEL (B) & (C).

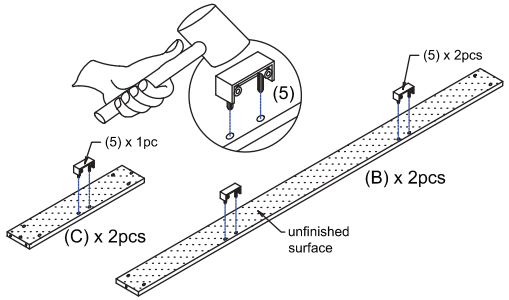

STEP 2

INSERT DOWEL (4) INTO PANEL (C)(F)(G)(H).

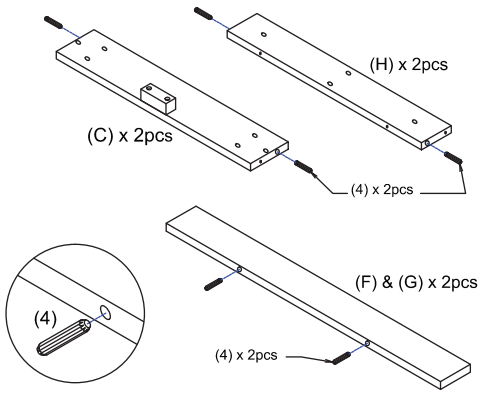

STEP 3

ATTACH PANEL (B) TO PANEL (C) WITH SCREW (1).

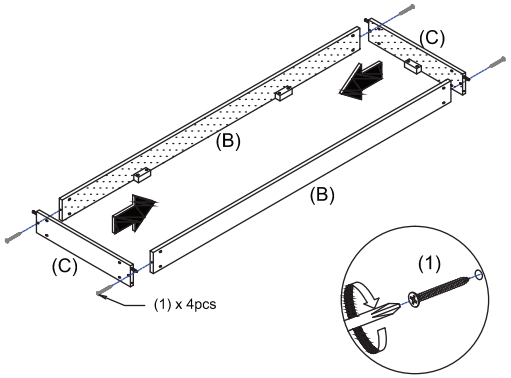

STEP 4

4.1 ATTACH PANEL (I) TO PANEL (H) WITH SCREW (1).
4.2 ATTACH PANEL (J) TO ASSEMBLED PARTS WITH SCREW (1).

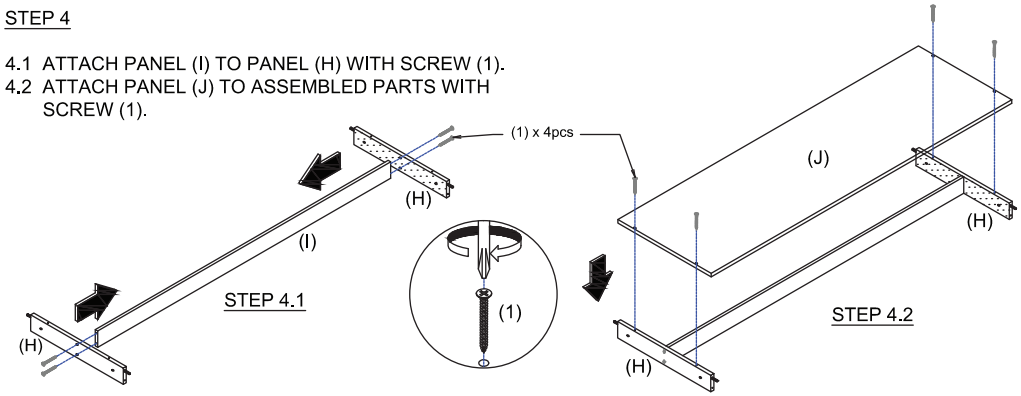

STEP 5

TIGHTEN BRACKET (5) TO PANEL (A) WITH SCREW (2).

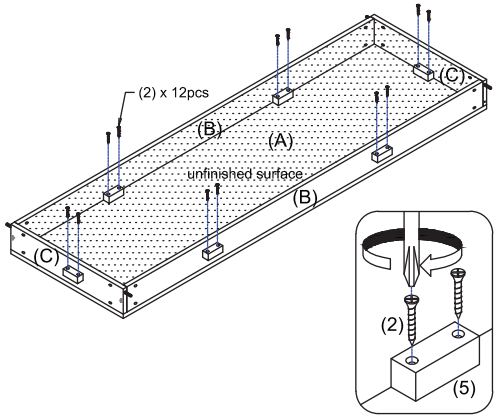

STEP 6

ATTACH PANEL (D) & (E) TO THE ASSEMBLED PARTS WITH SCREW (1).

