2

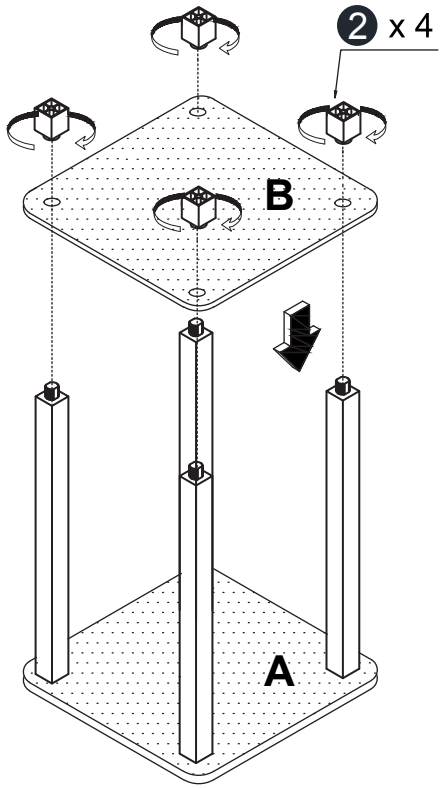

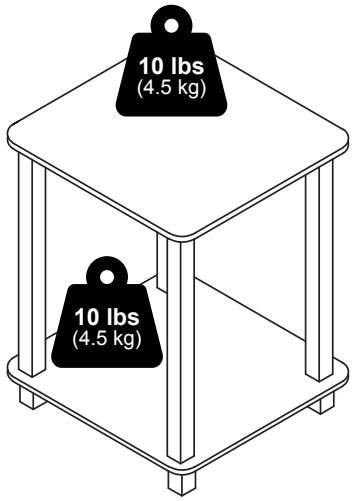

Furinno®

Fits Space, Fits Budget





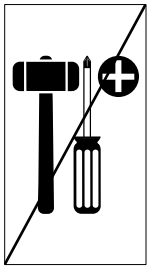

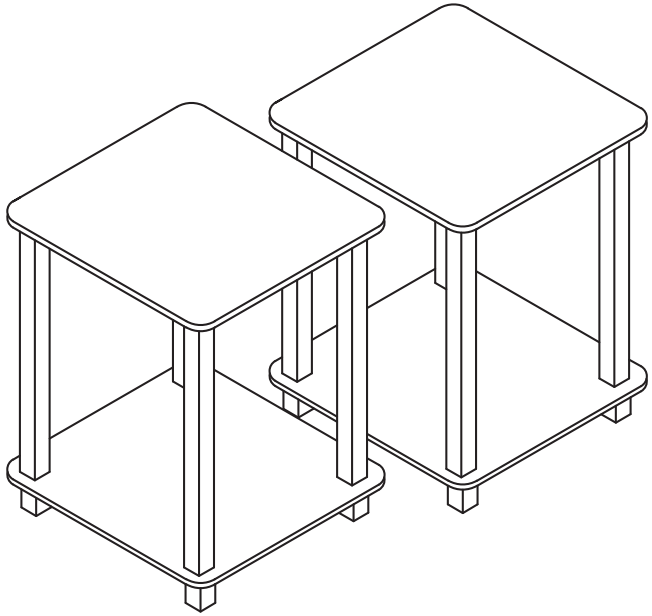

MODEL: 12127

www.furinno.com

1212720230103

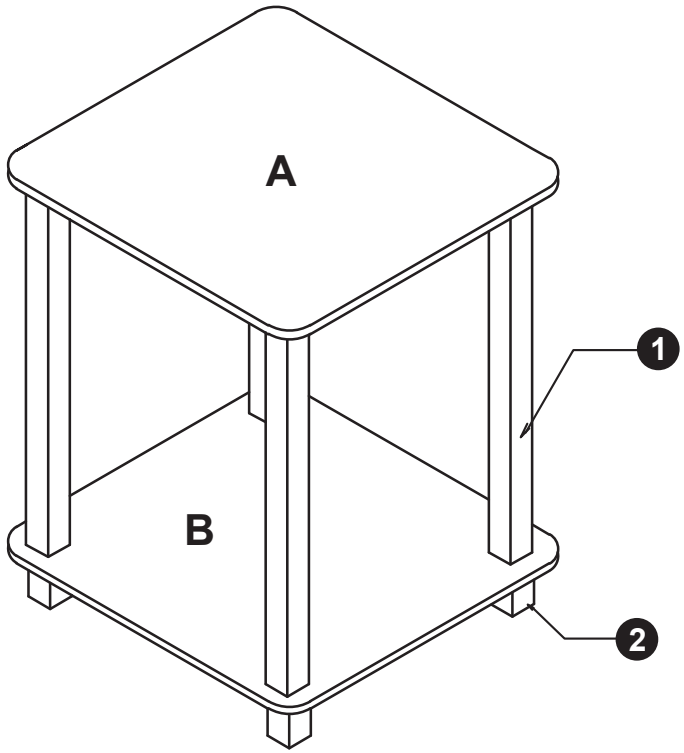

1 x 8 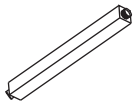	2 x 8 

1

