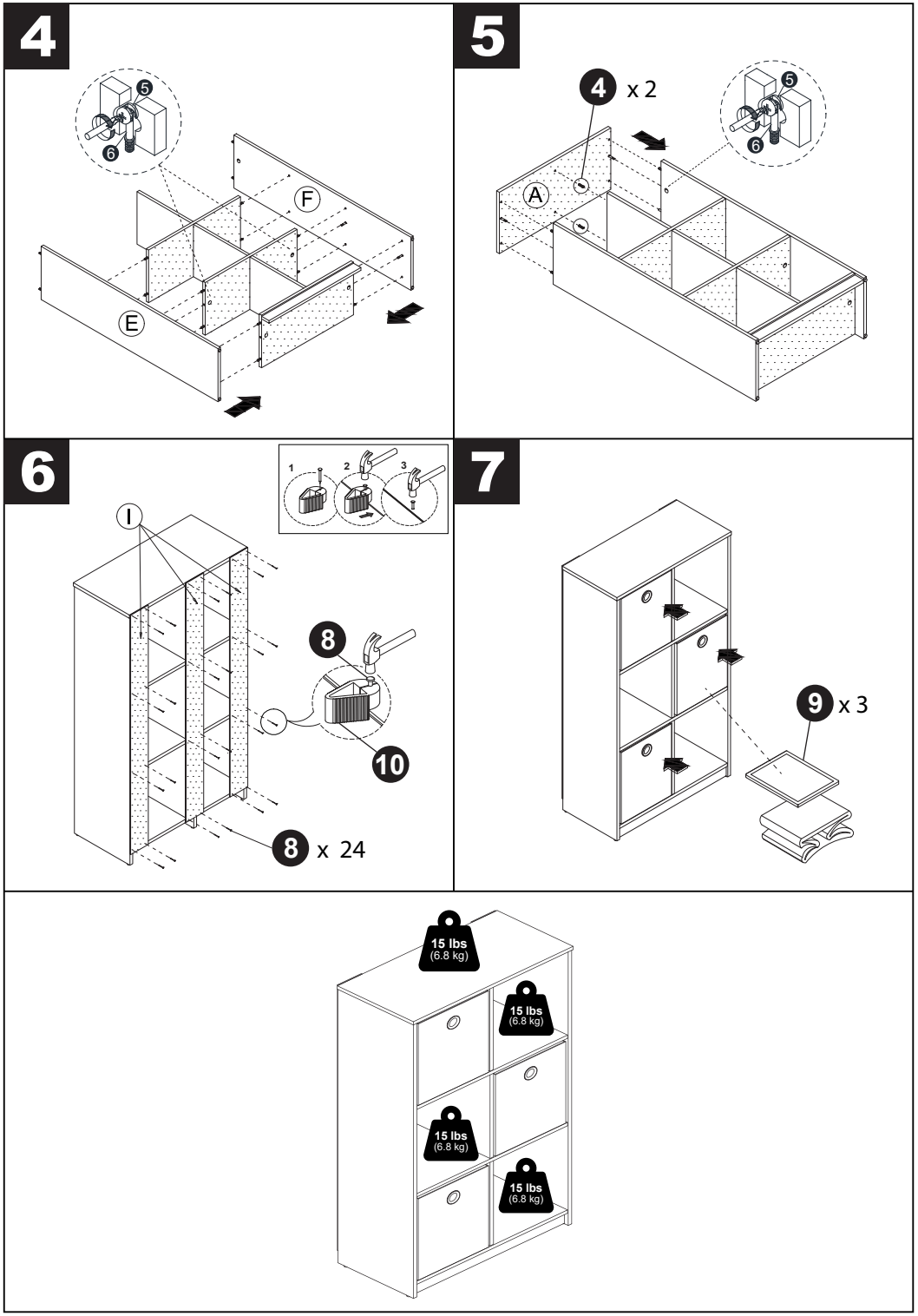

Furinno®

Fits Space, Fits Budget



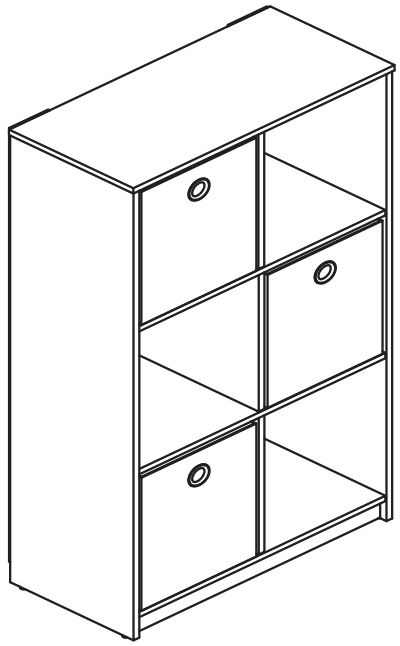

MODEL: 13087

support@furinno.com

www.furinno.com

1308720230602

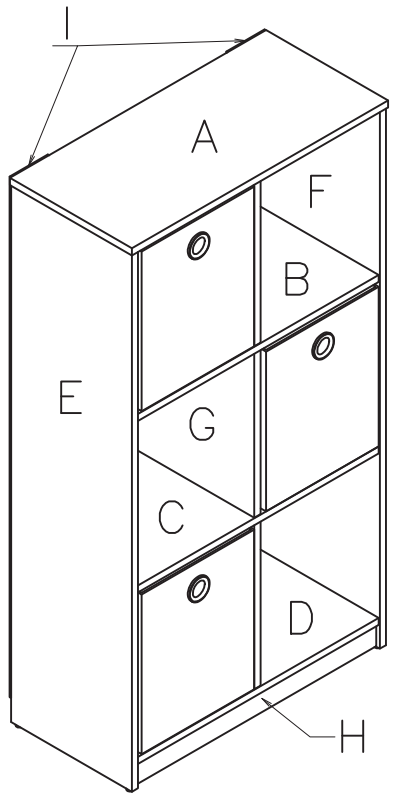

1 x 4 M5 x 40mm	2 x 2 17 x 22mm	3 x 4 M6 x 40mm	4 x 20 M6 x 20mm
5 x 6 15mm	6 x 6 M6 x 31mm	7 x 4 10mm	8 x 24 4 x 20mm
	9 x 3 220L x 230W x 270H	10 x 1	

1

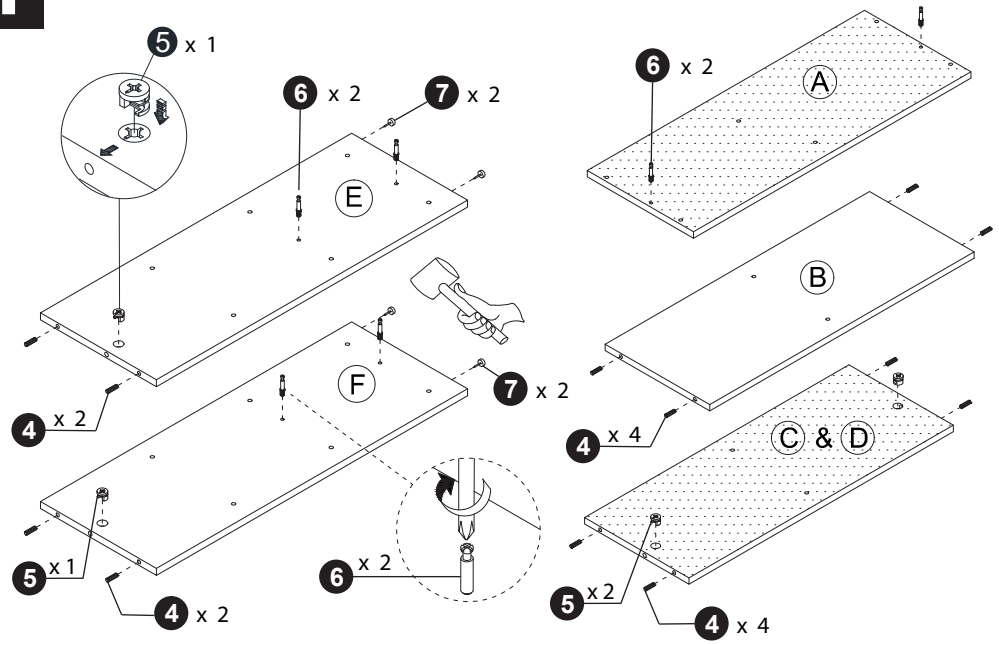

2

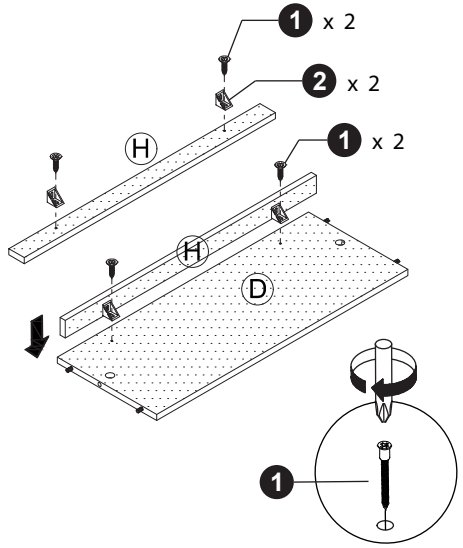

3

