5

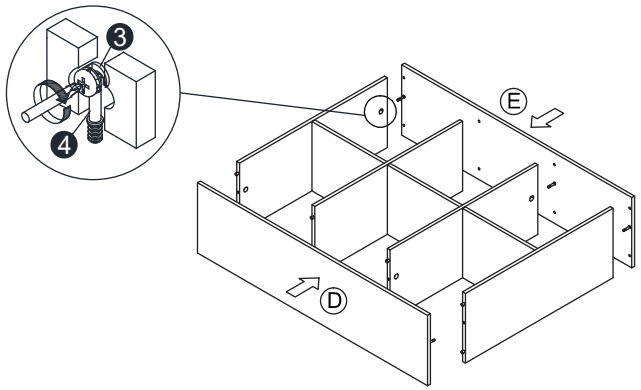

6

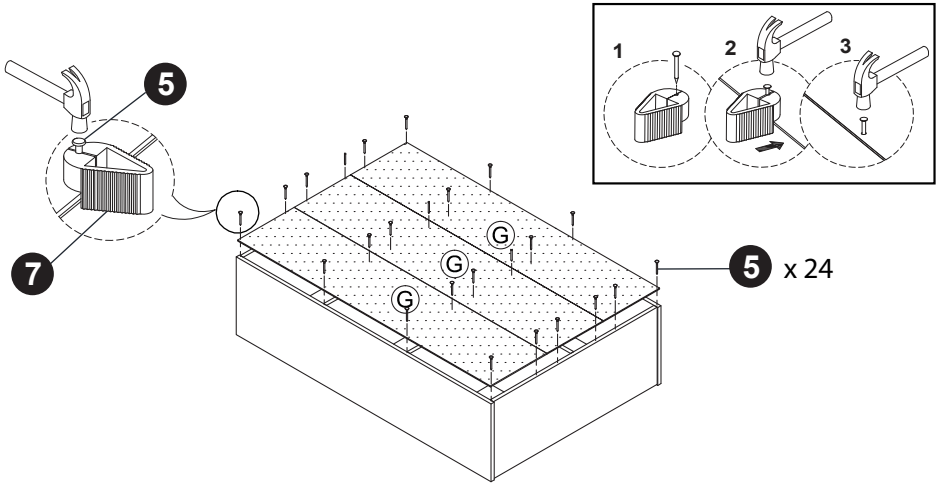

7

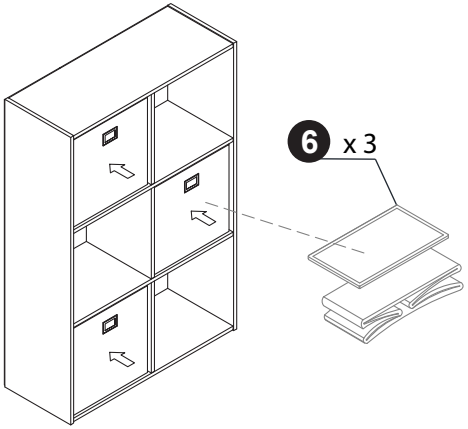

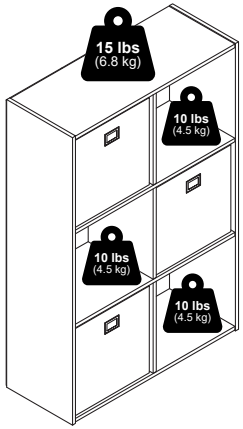

Furinno®

Fits Space, Fits Budget



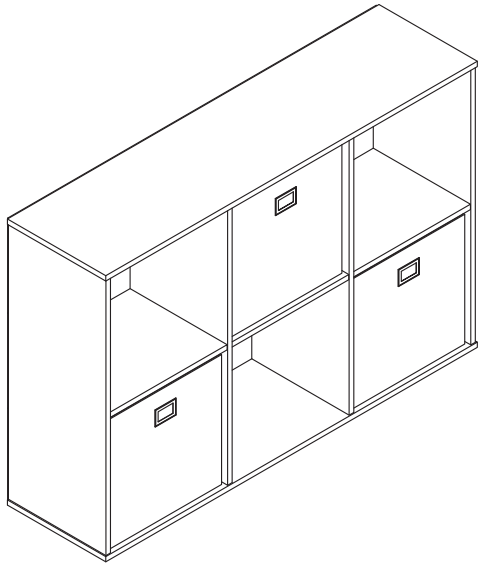

MODEL: 13093

support@furinno.com

www.furinno.com

1309320230601

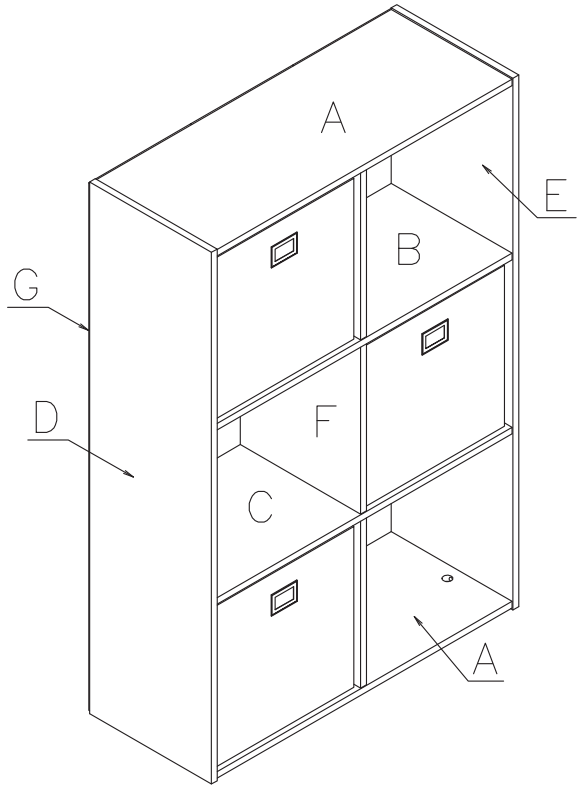

1 x 20 M6 x 20mm	2 x 4 M6 x 40mm	3 x 6 15mm	4 x 6 M6 x 31mm
5 x 24 2.5 x 18mm	6 x 3 270L x 230W x 270H	7 x 1	

1

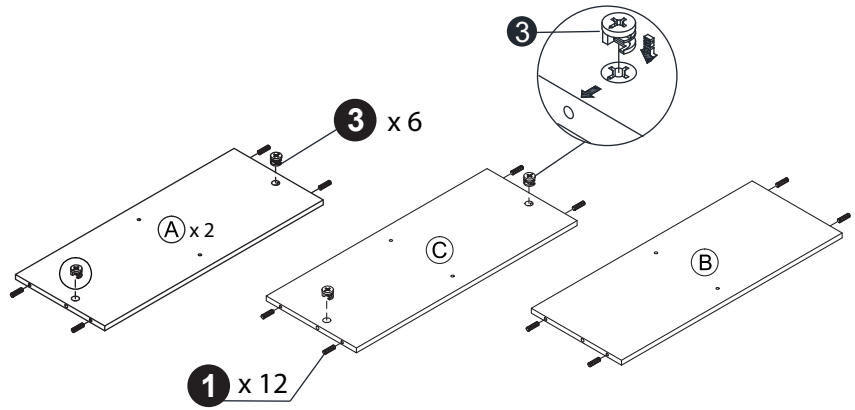

2

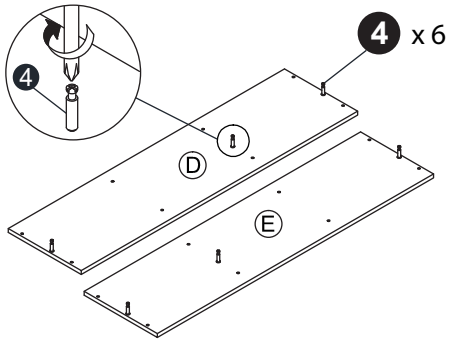

3

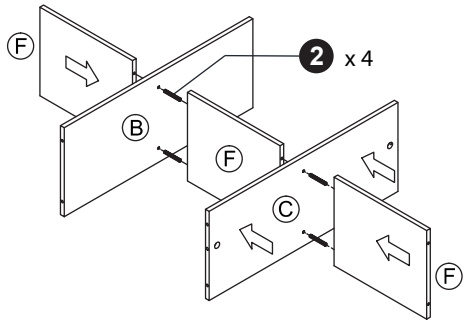

4

