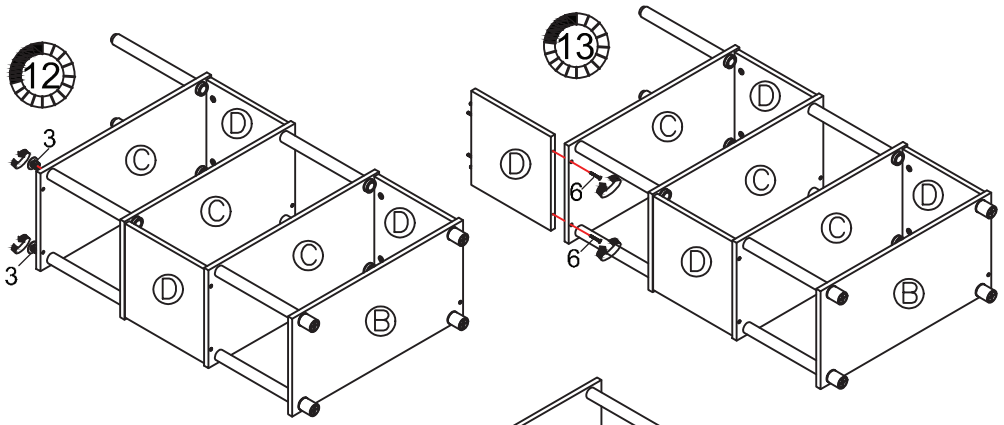

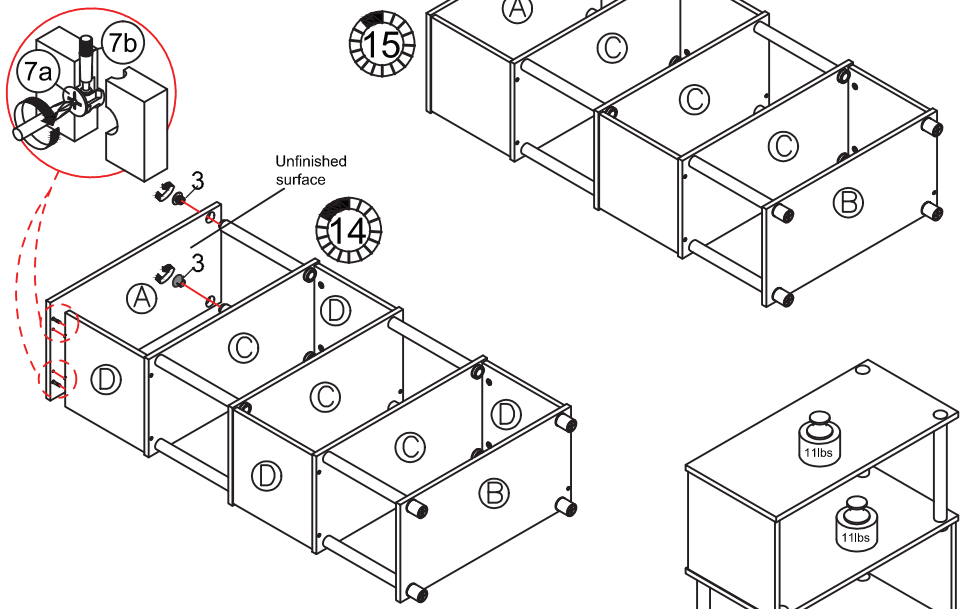

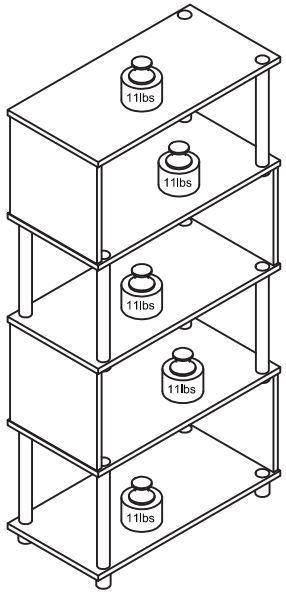

WARNING:

>This unit has been designed to support the maximum loads shown. Exceeding these load limits could cause sagging, instability, product collapse, and/or serious injury.

>DO NOT allow children to climb on unit.

>Put heavier items on lower shelves.

Furinno®

Fits Space. Fits Budget

Assembly Instruction

Furinno 4 Tier Flexi Rack

MODEL : **14216**

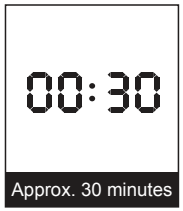

Approx. 30 minutes



Recomm. 1 Person

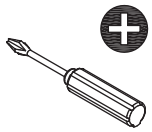

Tool Required

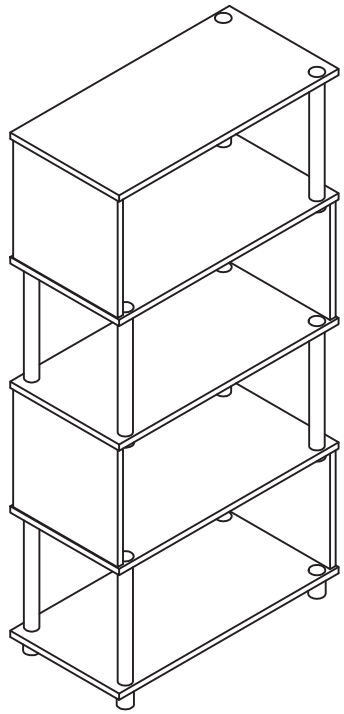

Customer Support

NEED HELP? For replacement requests or product inquiries, please contact our Customer Service Team by emailing us at **support@furinno.com**. Thank you for selecting Furinno!

www.furinno.com

1421620180809

NO	HARDWARE LIST	QTY
1	ROUND POLE	8pcs
2	ROUND LEG	4pcs
3	TOP CAP	10pcs
4	ROUND RING	6pcs
5	SMALL ROUND LEG	6pcs
6	C/B SCREW	8pcs
7	MINI FIX + HOUSING (7a, 7b)	8pcs
8	DOWEL	8pcs

NO	PARTS LIST	QTY
A	TOP PANEL	1pc
B	BOTTOM PANEL	1pc
C	SHELF PANEL	3pcs
D	SIDE PANEL	4pcs

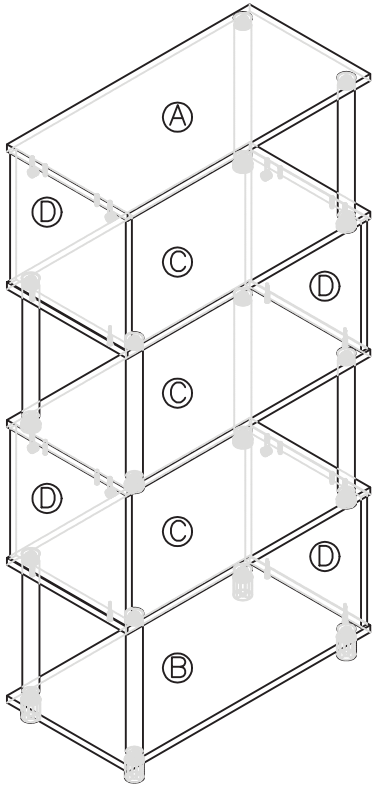

USEFUL HINTS BEFORE YOU START:

1. Read each step carefully before starting.
2. It is important that each step is performed in correct order to avoid difficulties.
3. Identify, sort and count the parts before assembly.
4. Assemble your furniture on packaging cardboard to prevent scratch or damage.
5. Clean the product with mild cleanser using soft damped cloth. Do not use harsh or abrasive cleanser.
6. Using uncompatible hardware might cause damage to product.

ASSEMBLY INSTRUCTION

