6

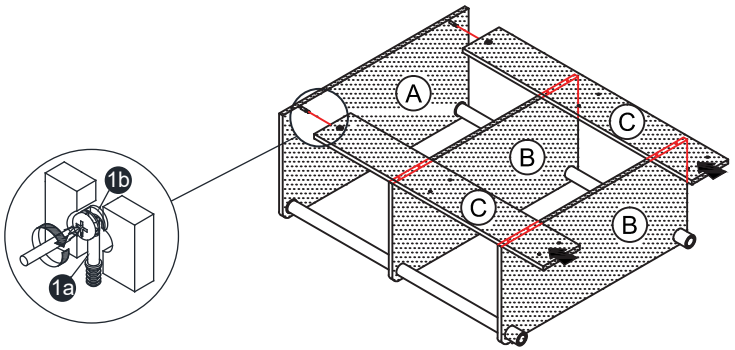

7

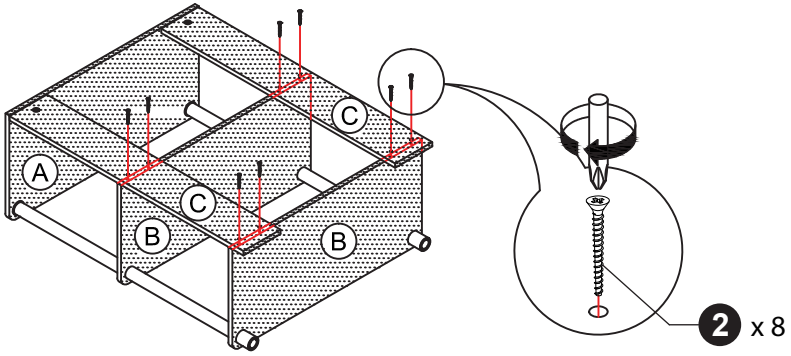

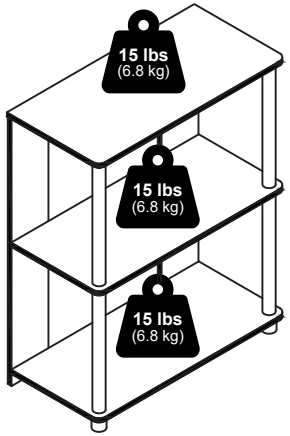

Furinno®

Fits Space, Fits Budget

00:30

x 1

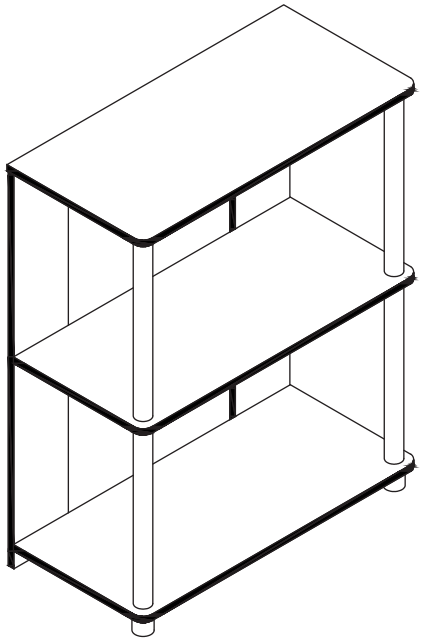

MODEL: 15070

support@furinno.com

www.furinno.com

1507020230608

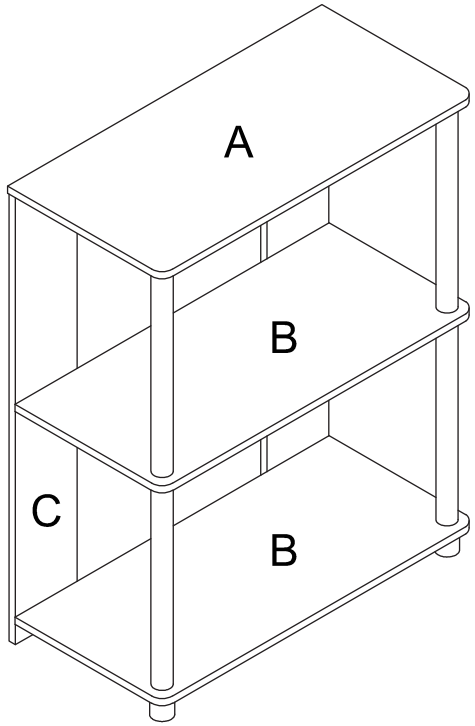

1 x 2  1a M6 x 31mm 1b 15mm	2 x 8  M4 x 32mm	3 x 2  10mm
4 x 2  34 x 38mm	5 x 4 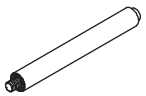 30 x 340mm	

1

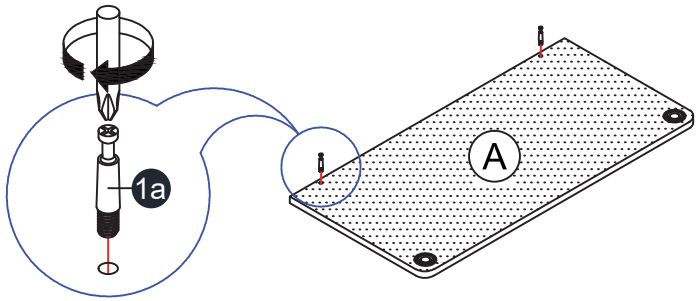

2

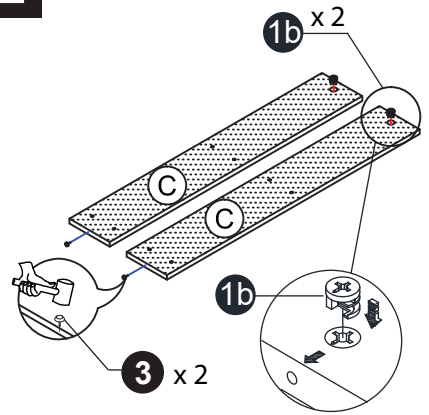

3

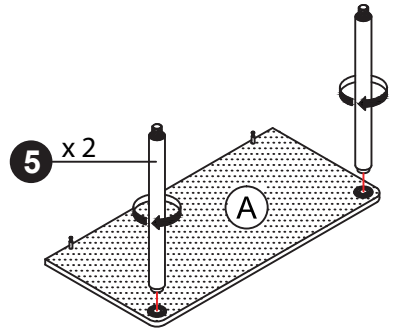

4

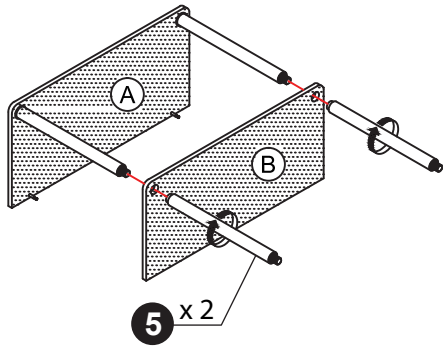

5

