Recommended Maximum Weight

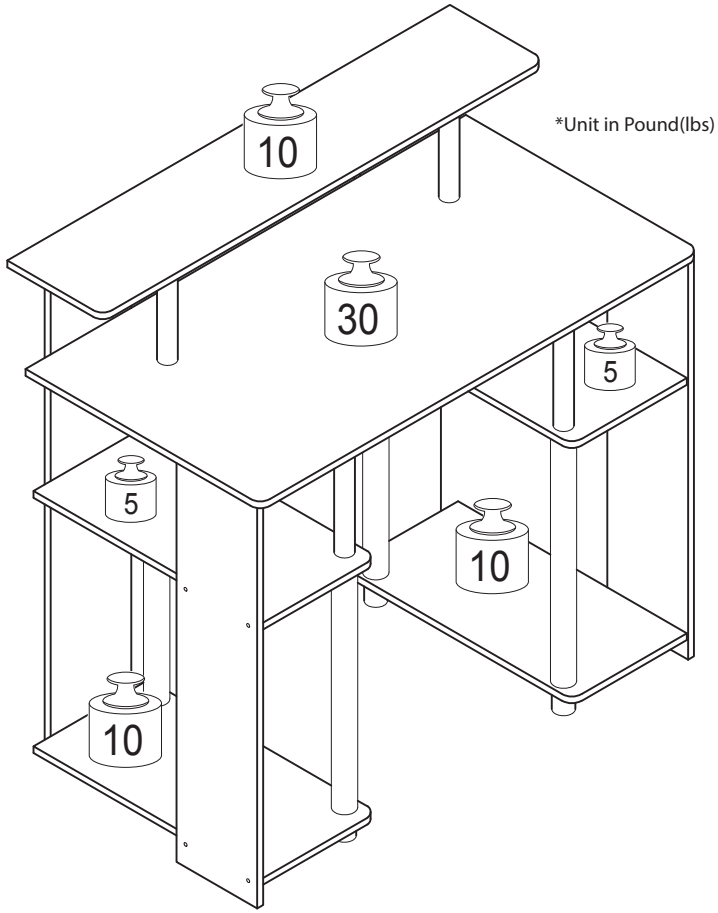

*Unit in Pound(lbs)

WARNING:

>This unit has been designed to support the maximum loads shown. Exceeding these load limits could cause sagging, instability, product collapse, and/or serious injury.

>DO NOT allow children to climb on unit.

>Put heavier items on lower shelves.

Furinno®
Fits Space. Fits Budget

Assembly Instruction

Furinno JAYA Simple Design Computer Writing Desk

MODEL : **15071**

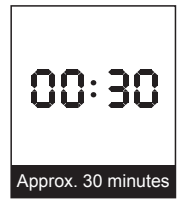

Approx. 30 minutes


Recomm. 2 Person


Tool Required

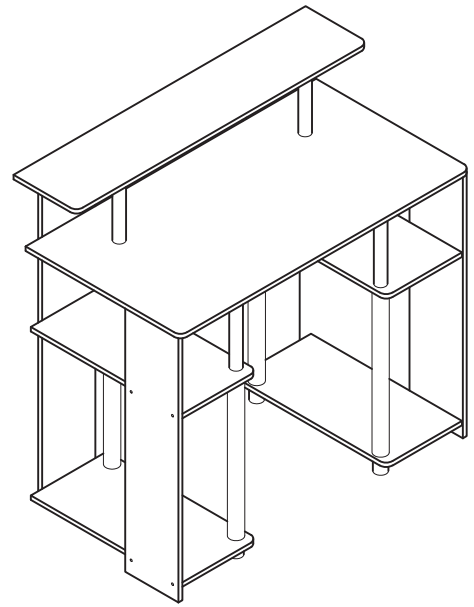

Customer Support

NEED HELP? For replacement requests or product inquiries, please contact our Customer Service Team by emailing us at **support@furinno.com**. Thank you for selecting Furinno!

www.furinno.com

1507120200807

No	Hardware List	Qty
1	Mini Fix Bolt+Cam 1A 1B	4pcs
2	C/B Screw	20pcs
3	Dowel	8pcs
4	Nail Leg	8pcs
5	Long Round Pole	4pcs
6	Middle Round Pole	4pcs
7	Short Round Pole	2pcs
8	Round Leg	4pcs
9	Small Leg	2pcs
10	PVC Round Ring	2pcs

No	Parts List	Qty
A	Top Panel	1pc
B	Upper Top Panel	1pc
C	Side Panel	2pcs
D	Left Shelf Panel	2pcs
E	Right Shelf Panel	2pcs
F	Back Panel	2pcs

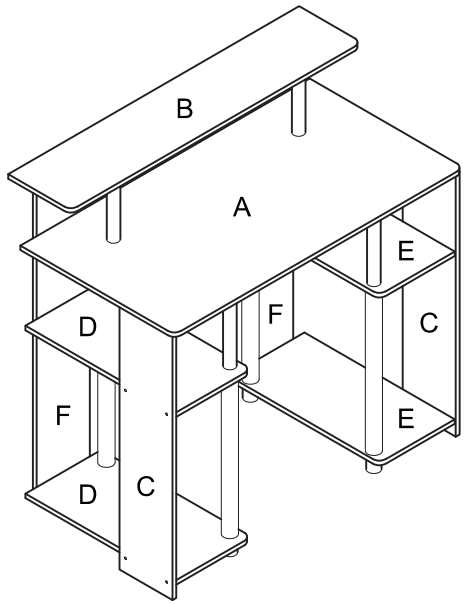

USEFUL HINTS BEFORE YOU START:

1. Read each step carefully before starting.
2. It is important that each step is performed in correct order to avoid difficulties.
3. Identify, sort and count the parts before assembly.
4. Assemble your furniture on packaging cardboard to prevent scratch or damage.
5. Clean the product with mild cleanser using soft damped cloth. Do not use harsh or abrasive cleanser.
6. Using uncompatible hardware might cause damage to product.

FINISH VIEW

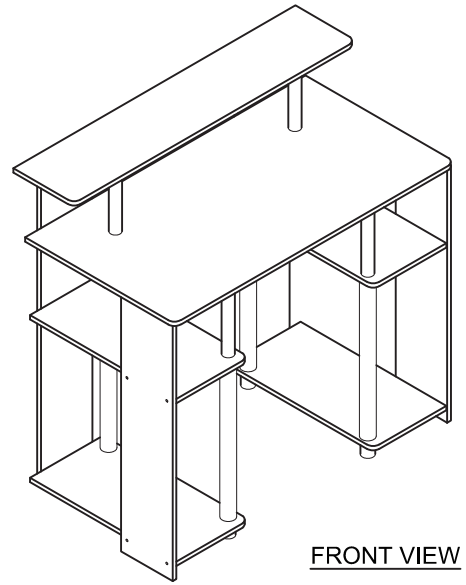

FRONT VIEW

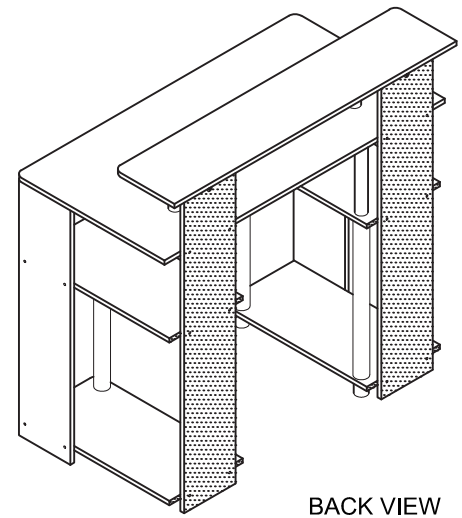

BACK VIEW

STEP 7
ATTACH BACK PANEL (F) TO BACK POSITION OF ASSEMBLED UNIT USING SCREW (2) AND TIGHTEN IT, AS SHOWN.

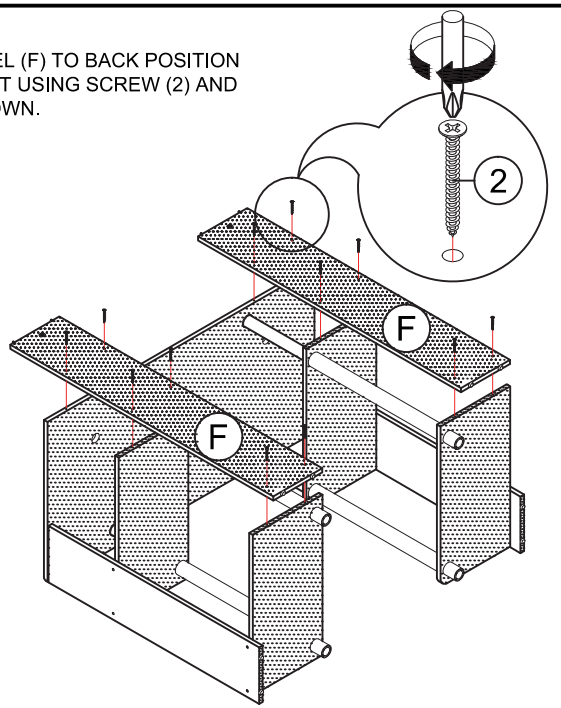

STEP 8
ATTACH SHORT ROUND POLES (7) TO PANEL (B) AND TIGHTEN IT, AS SHOWN.

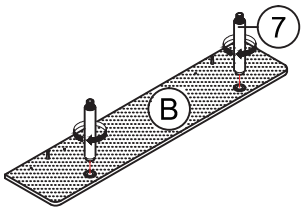

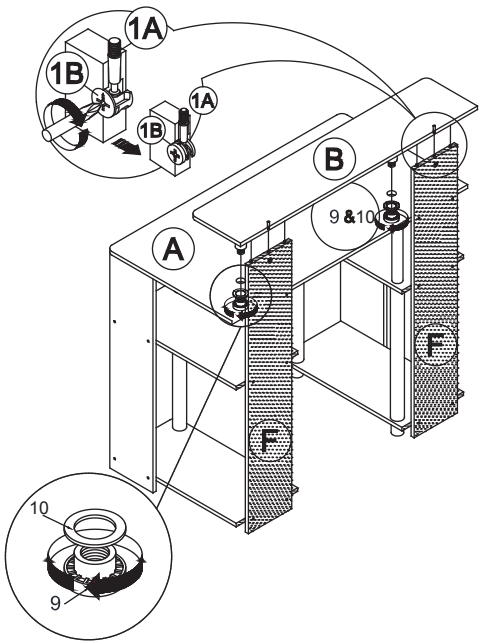

STEP 9
- ATTACH SHORT ROUND POLE (7) TO PANEL (A) USING SMALL LEG (9) TOGETHER WITH PVC ROUND RING (10) AND TIGHTEN IT, AS SHOWN.
- ATTACH PANEL (B) TO PANEL (F) USING MINI FIX BOLT (1A) & CAM (1B) AND TIGHTEN IT, AS SHOWN.

ASSEMBLY INSTRUCTION

STEP 1
- INSTALL MINI FIX (1A) INTO PANEL (A) & (B), AS SHOWN.

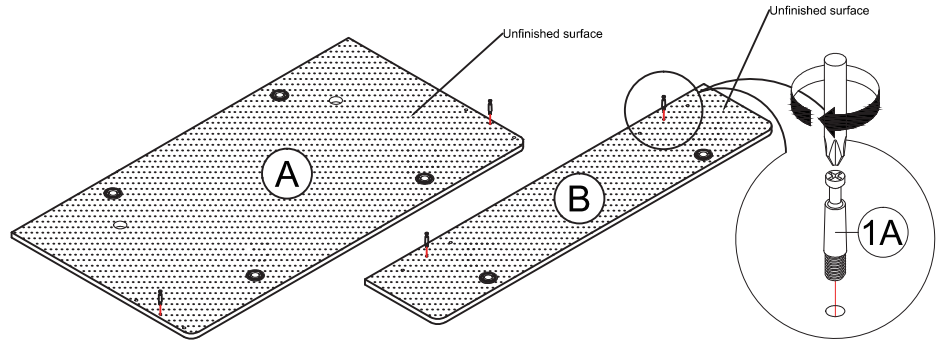

STEP 2
- INSTALL DOWEL (3) INTO PANEL (C) & (F), AS SHOWN.
- INSTALL MINI FIX CAM (1B) INTO PANEL (C) & (F), AS SHOWN.
- ATTACH NAIL LEG (4) TO PANEL (C) & (F), AS SHOWN.

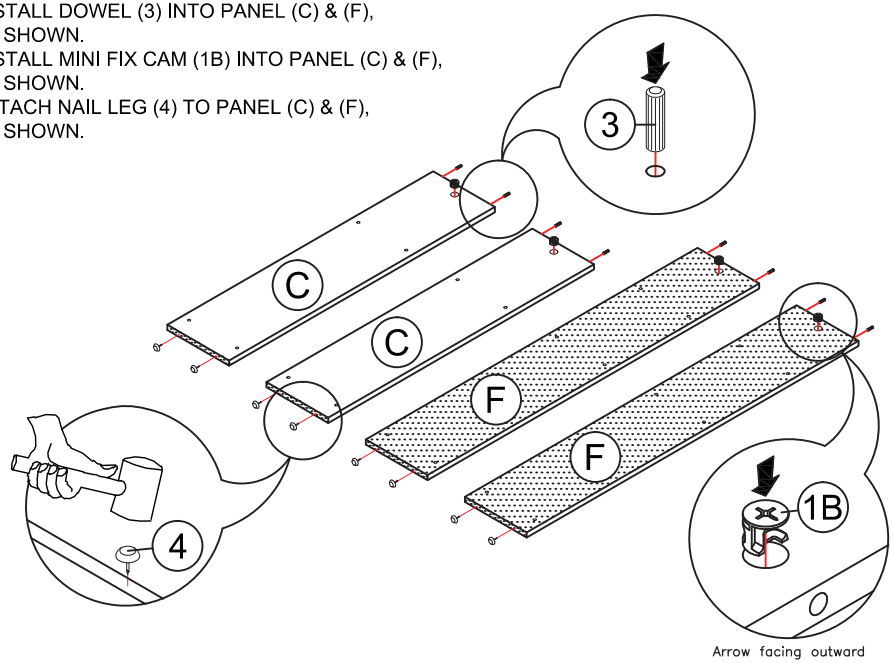

STEP 3
ATTACH MIDDLE ROUND POLE (6) TO PANEL (A)
AND TIGHTEN IT, AS SHOWN.

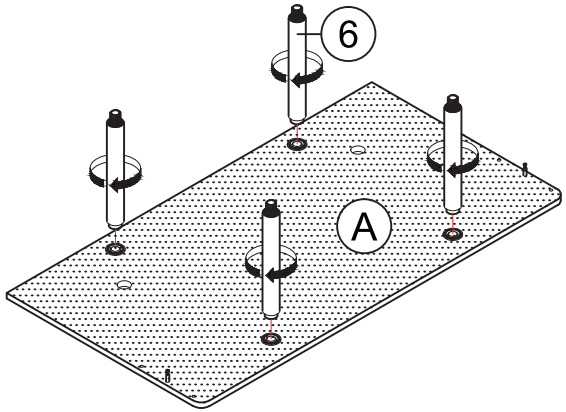

STEP 4
ATTACH PANEL (D) & (E) TO ASSEMBLED
UNIT USING LONG ROUND POLE (5) AND
TIGHTEN IT, AS SHOWN.

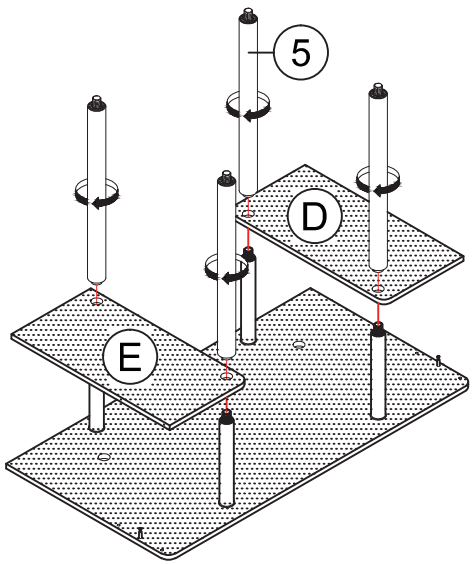

STEP 5
ATTACH PANEL (D) & (E) TO LONG ROUND POLE (5)
USING ROUND LEG (8) AND TIGHTEN IT, AS SHOWN.
ATTACH PANEL (C) TO PANEL (A) USING
MINI FIX BOLT (1A) & CAM (1B) AND TIGHTEN IT, AS
SHOWN.

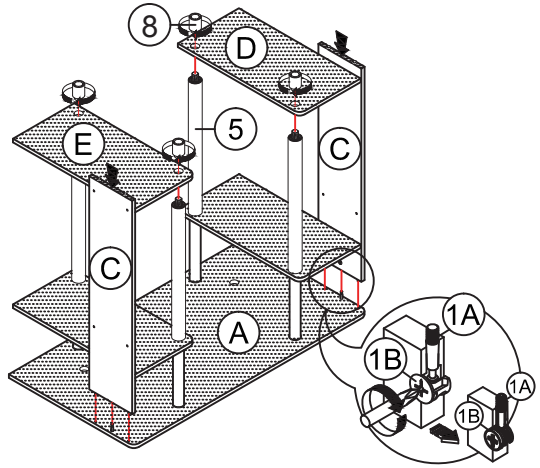

STEP 6
ATTACH PANEL (C) TO PANEL (D) & (E)
USING SCREW (2) AND TIGHTEN IT, AS SHOWN.

