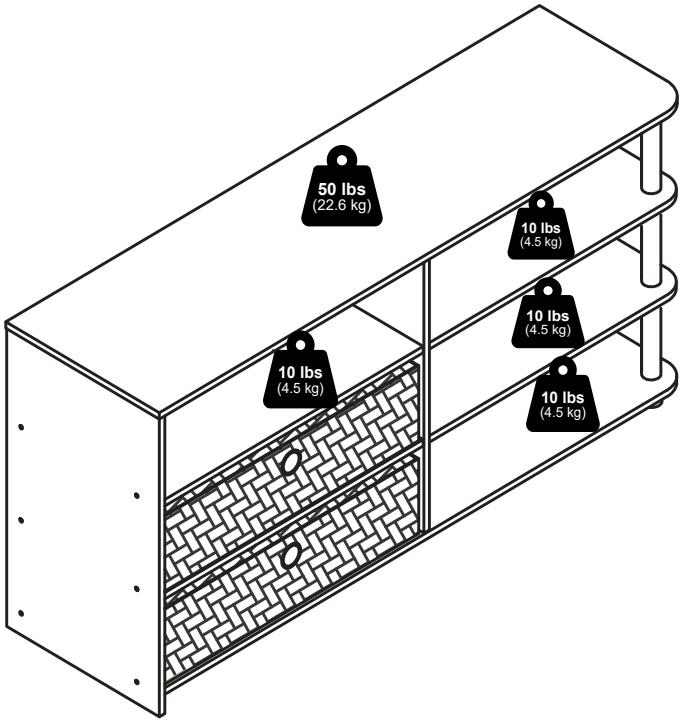

Furinno®

Fits Space, Fits Budget



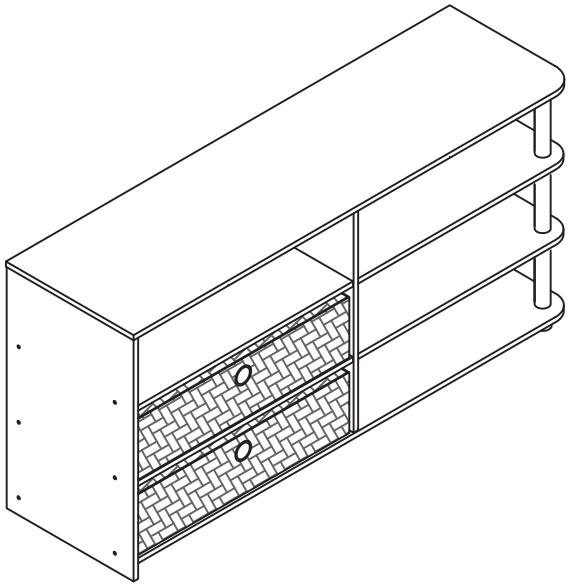

MODEL: 15078

support@furinno.com

www.furinno.com

1507820230522

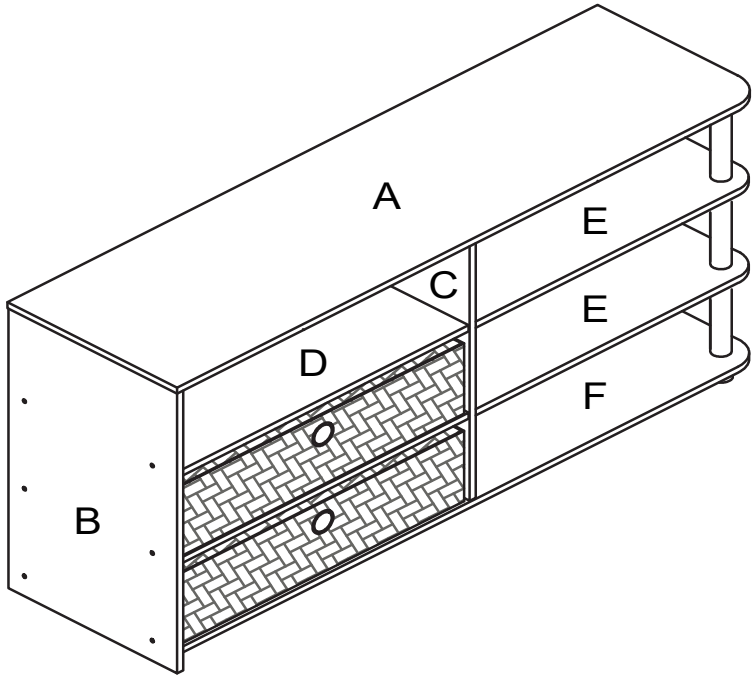

1 x 12 M4 x 32mm	2 x 4 M6 x 31mm	3 x 4 15mm	4 x 2
5 x 2 Ø34 x 38mm	6 x 6 Ø30 x 162mm	7 x 2	8 x 1 10mm
9 x20 2.5 x 18mm	10 x4 M6 X 40mm	11 x12 M6 X 20mm	12 x 1

14

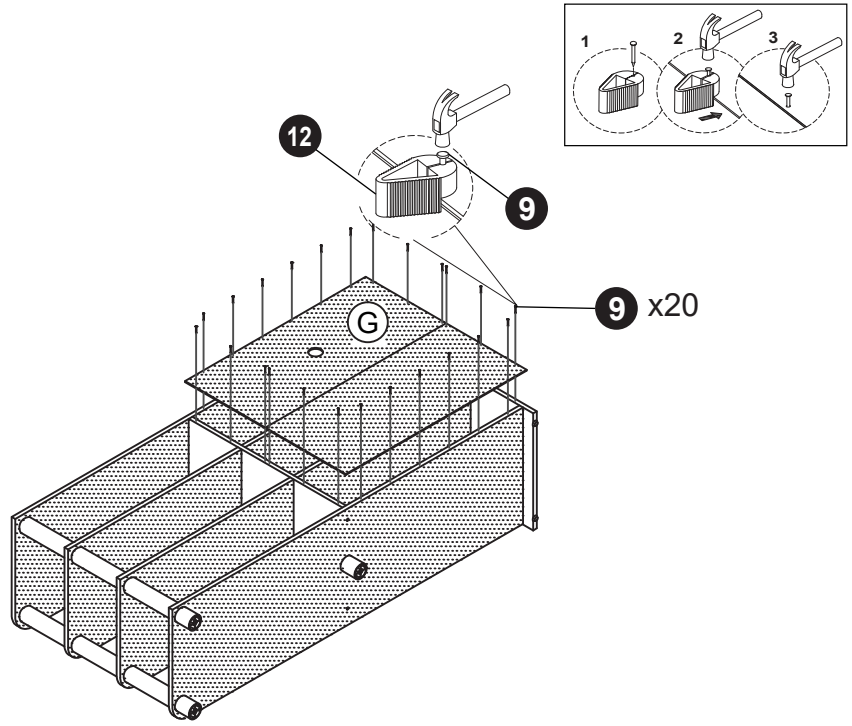

15

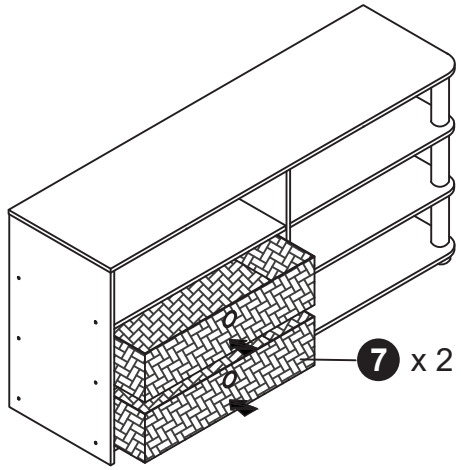

12

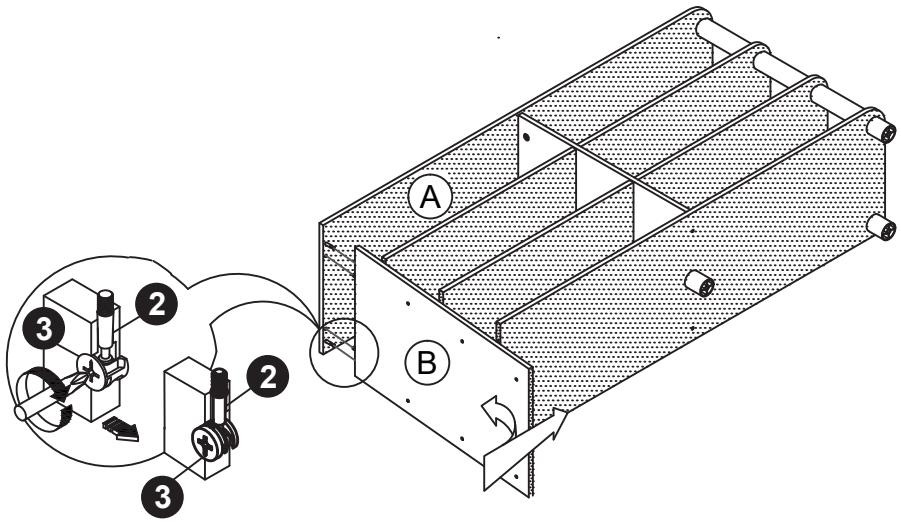

13

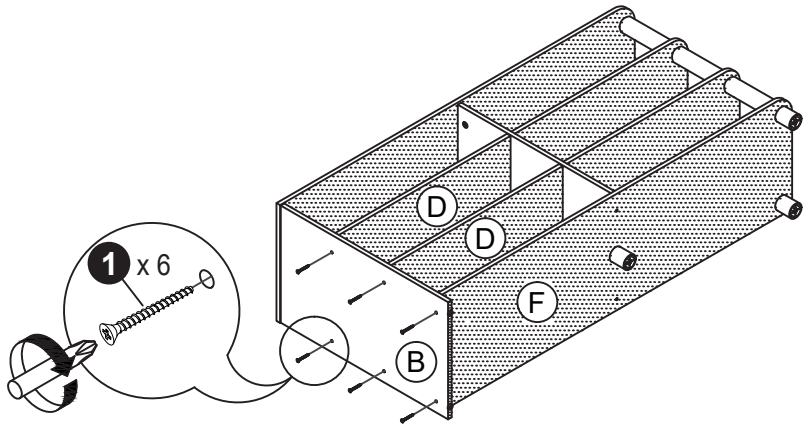

1

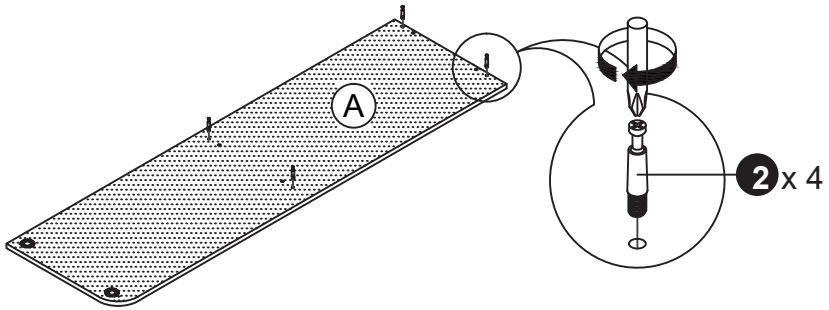

2

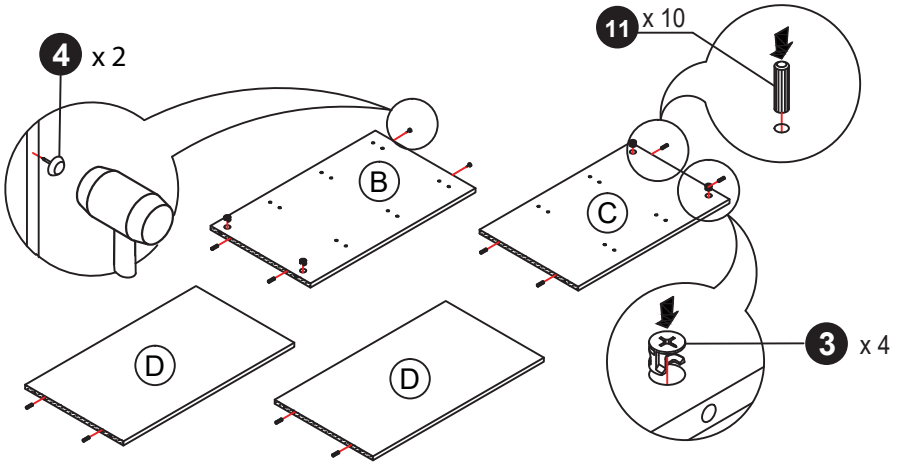

10

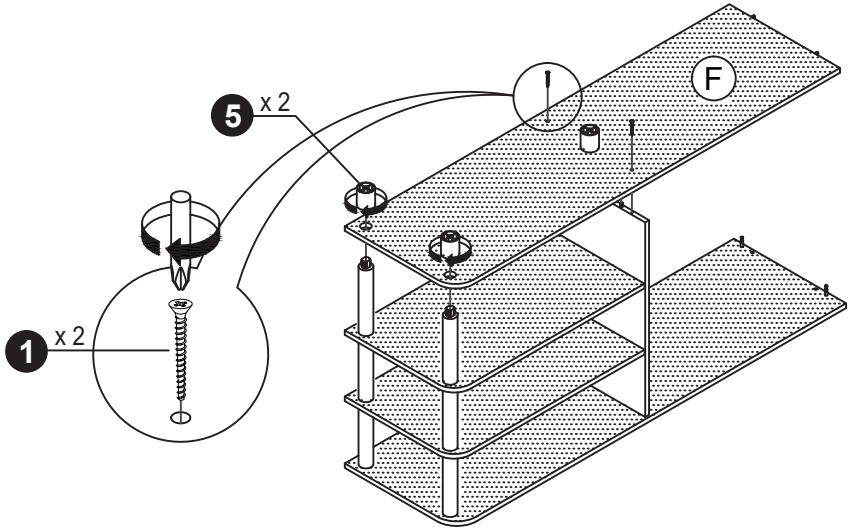

11

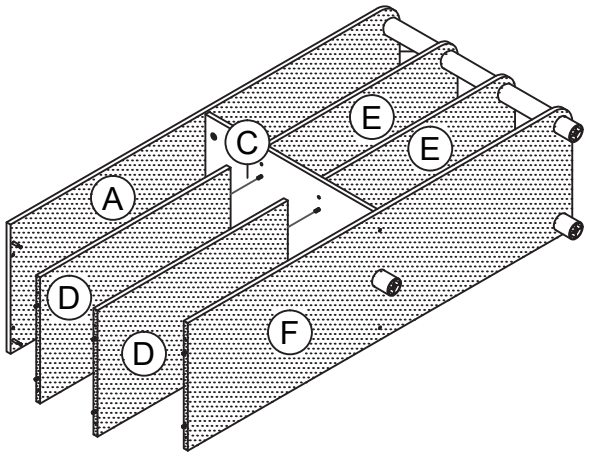

3

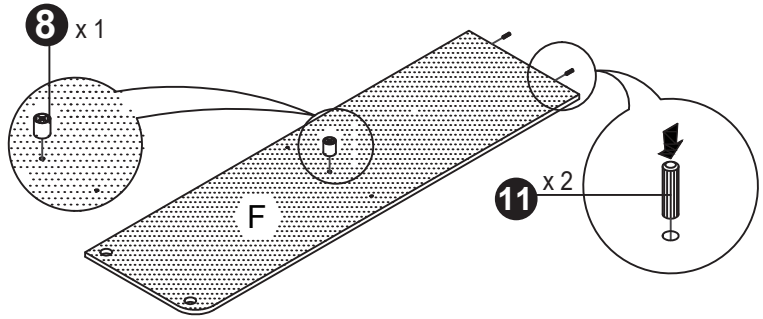

4

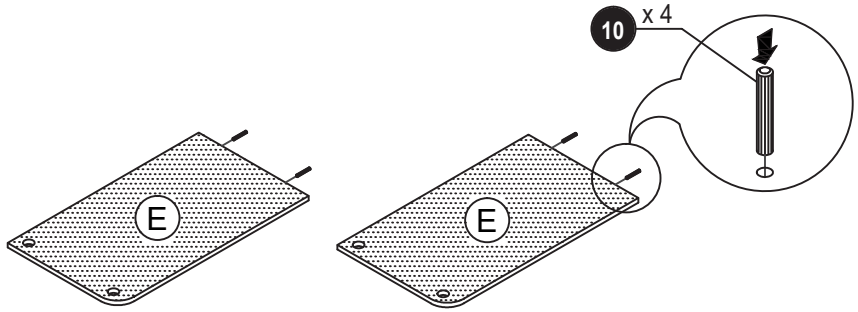

9

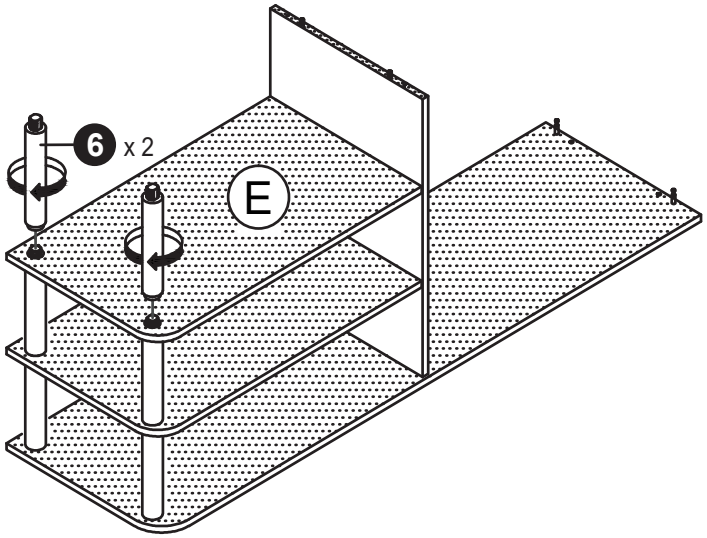

5

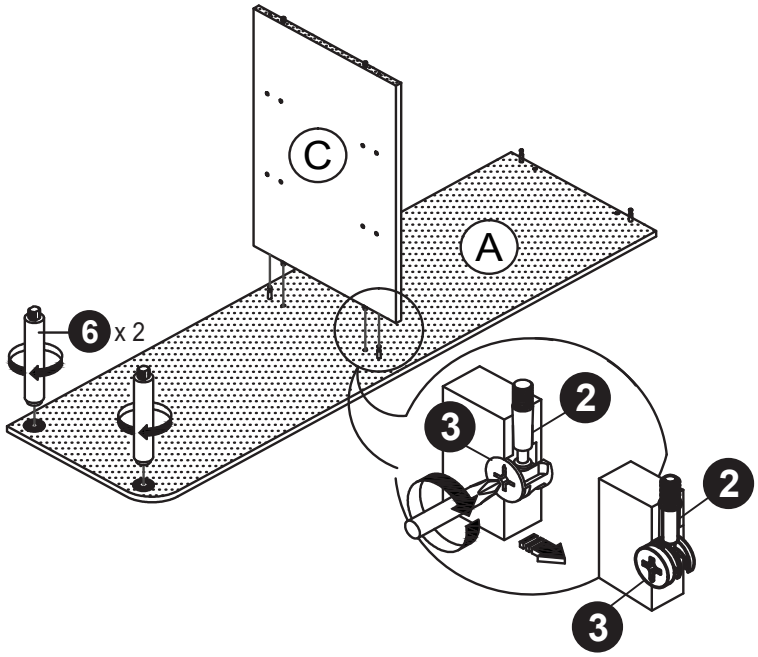

6

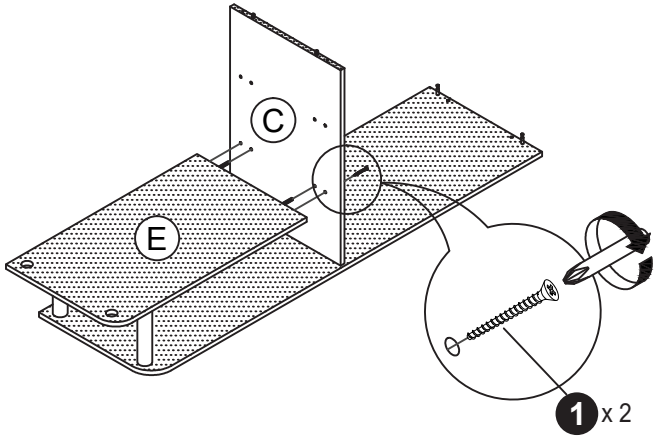

7

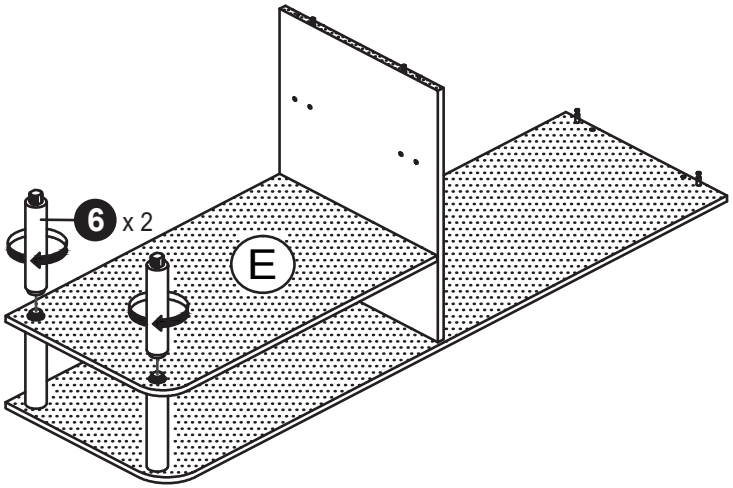

8

