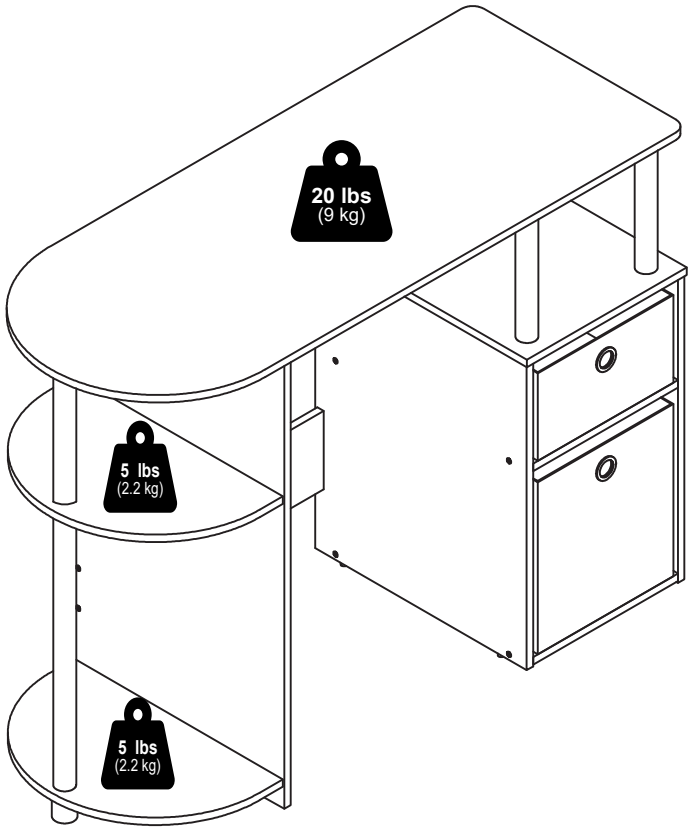

Furinno®

Fits Space, Fits Budget



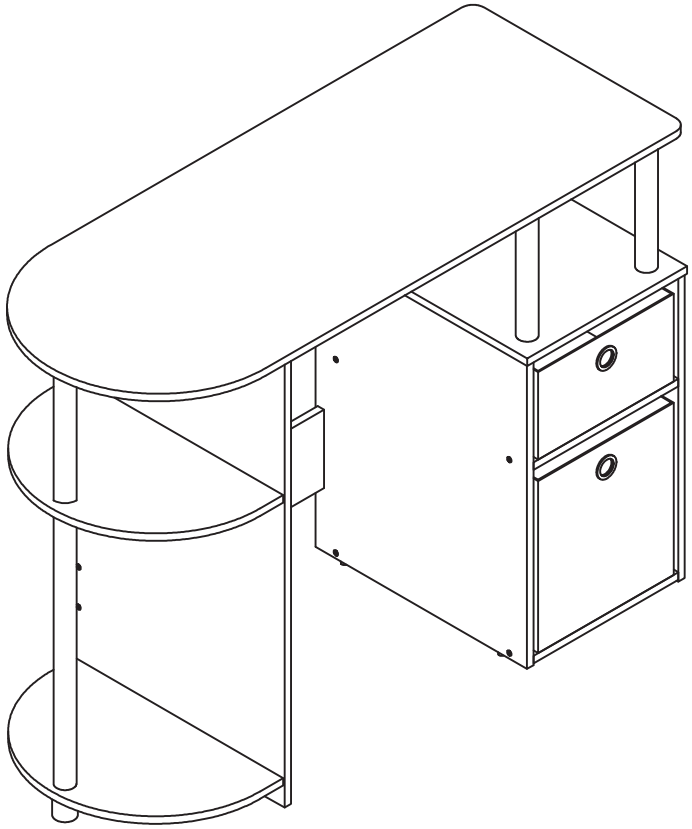

MODEL: 15111

support@furinno.com

www.furinno.com

1511120230617

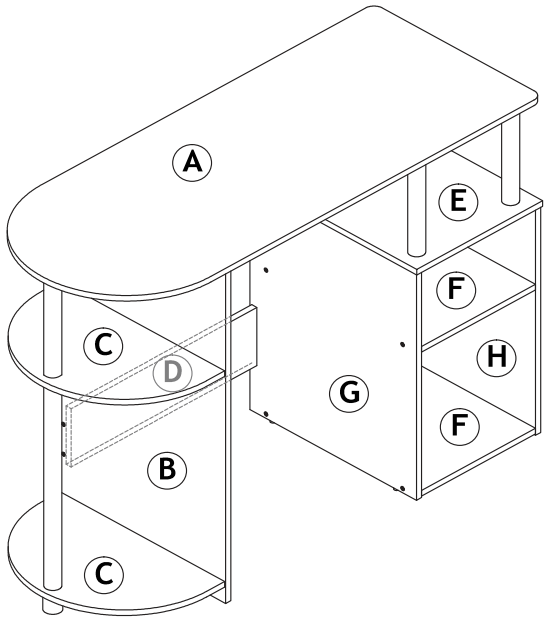

1 x 6 M6 X 31mm	2 x 6 15mm	3 x 16 M4 x32mm	4 x 18 M6 X 20mm
5 x 1 38 x 440mm	6 x 5 34 x 210mm	7 x 1 34 x 38mm	8 x 4 34 X 8mm
9 x 12 2.5 X 18mm	10 x 6 10mm	11 x 1 A B	12 x 8 34 X 2mm

13 x 1

15

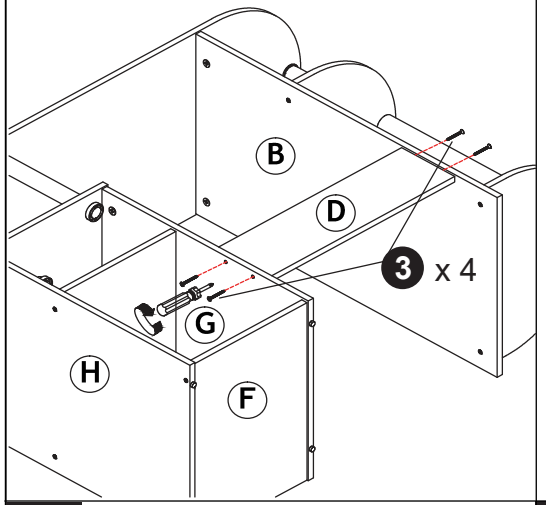

16

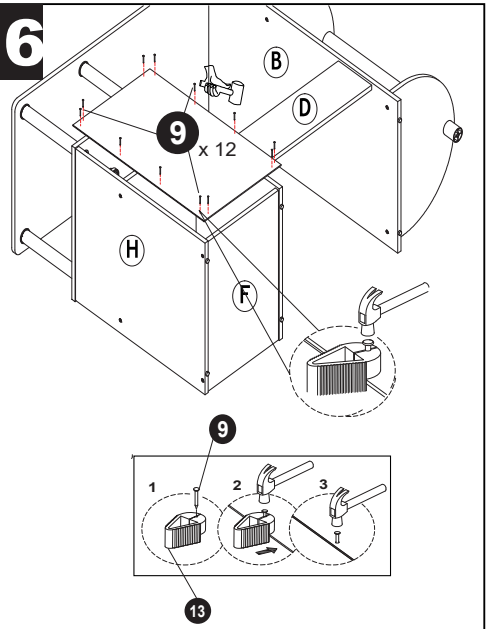

17

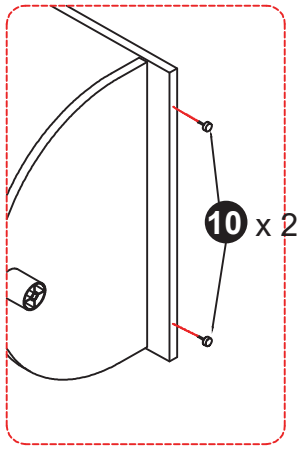

18

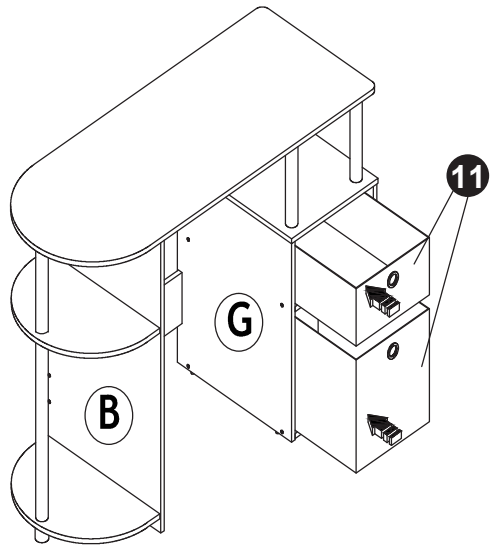

13

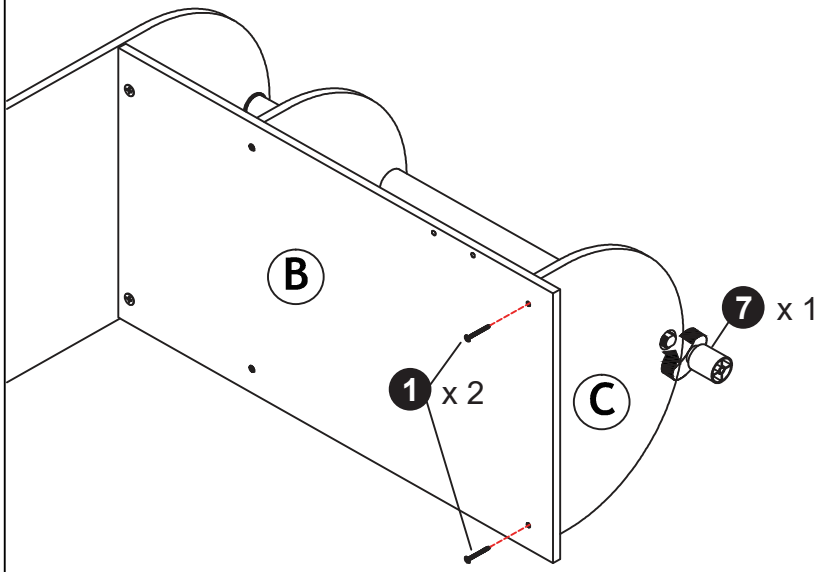

14

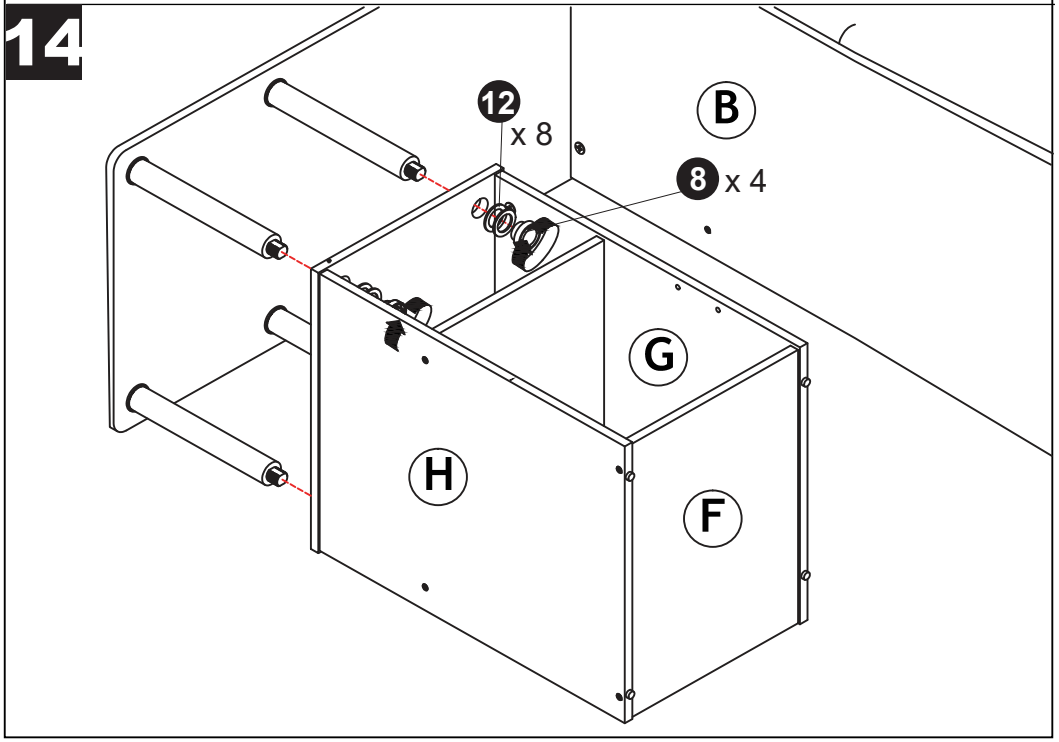

1

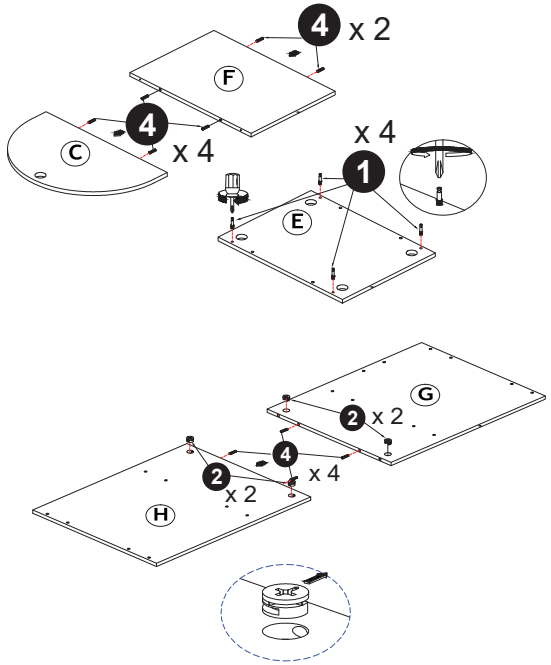

2

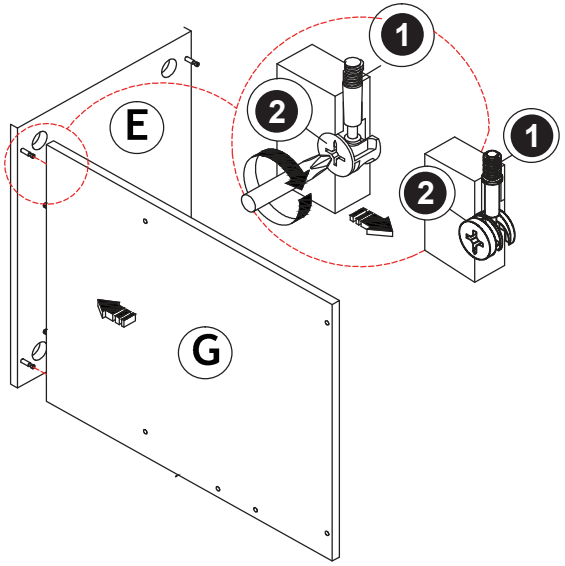

3

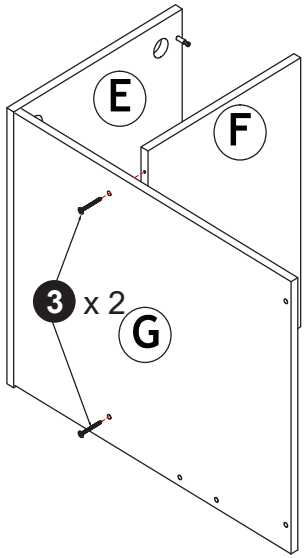

4

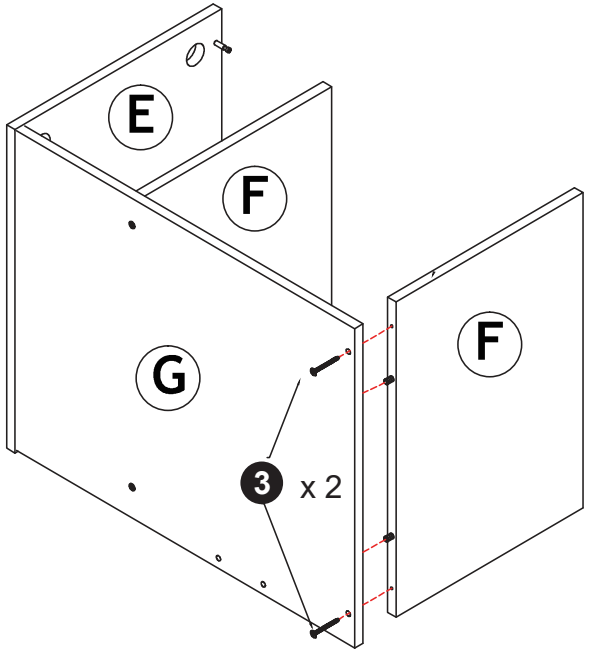

11

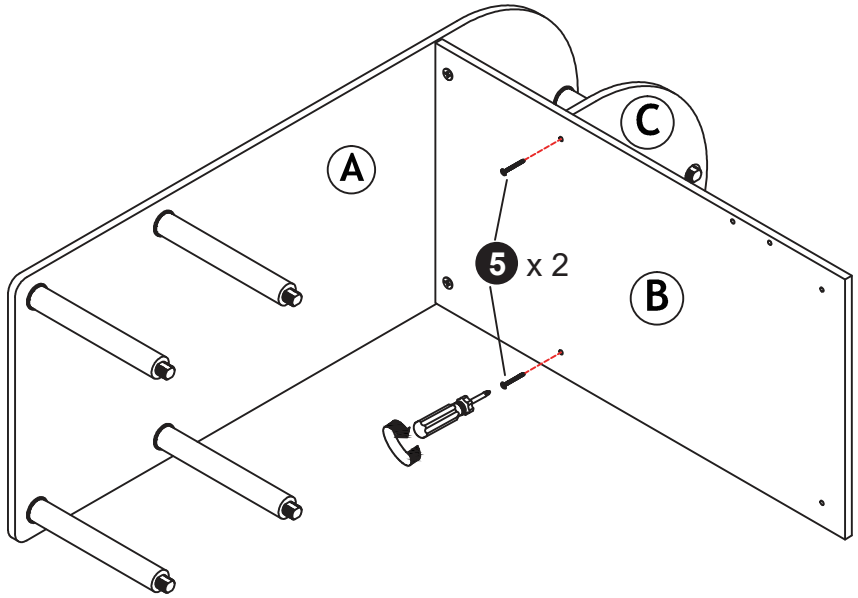

12

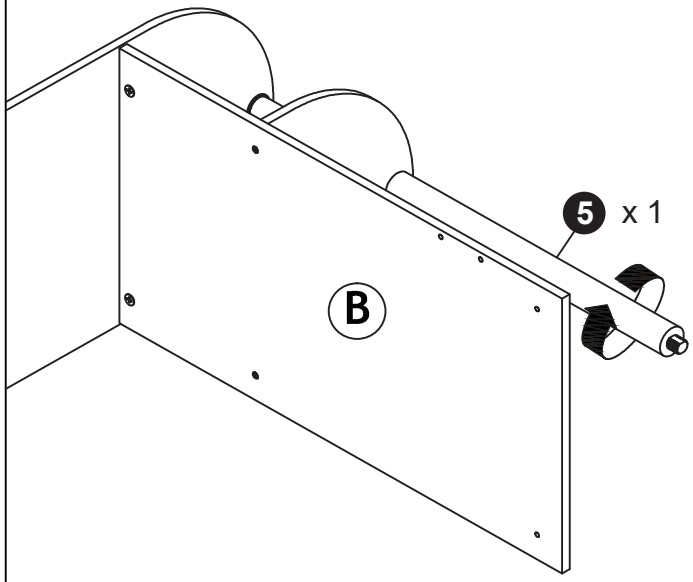

9

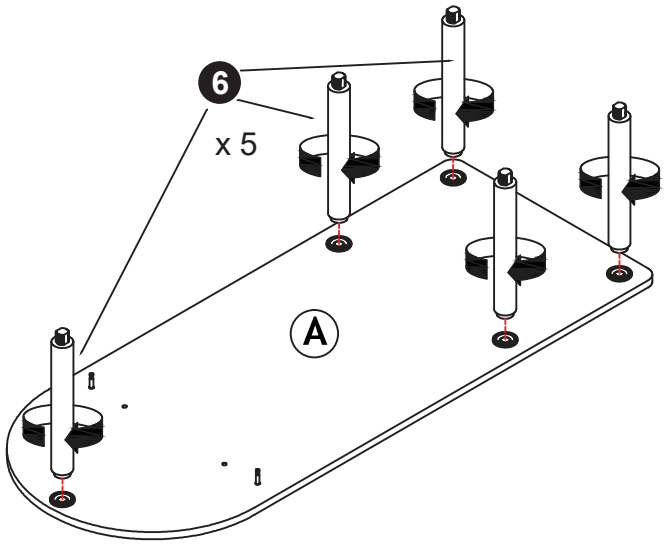

10

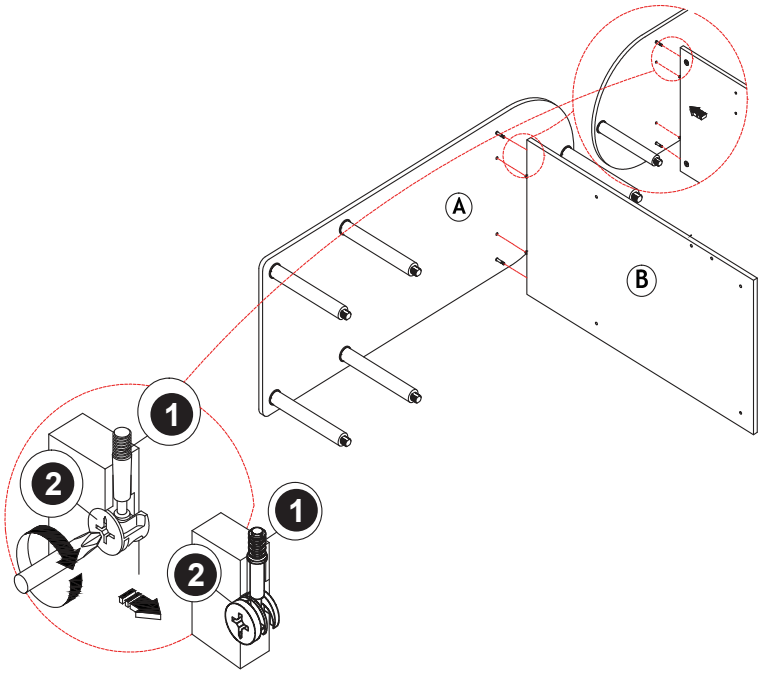

5

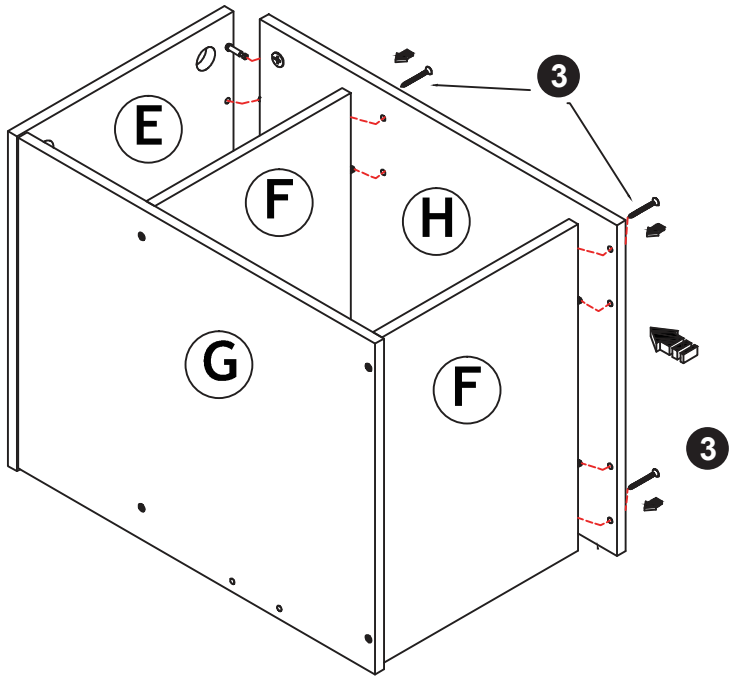

6

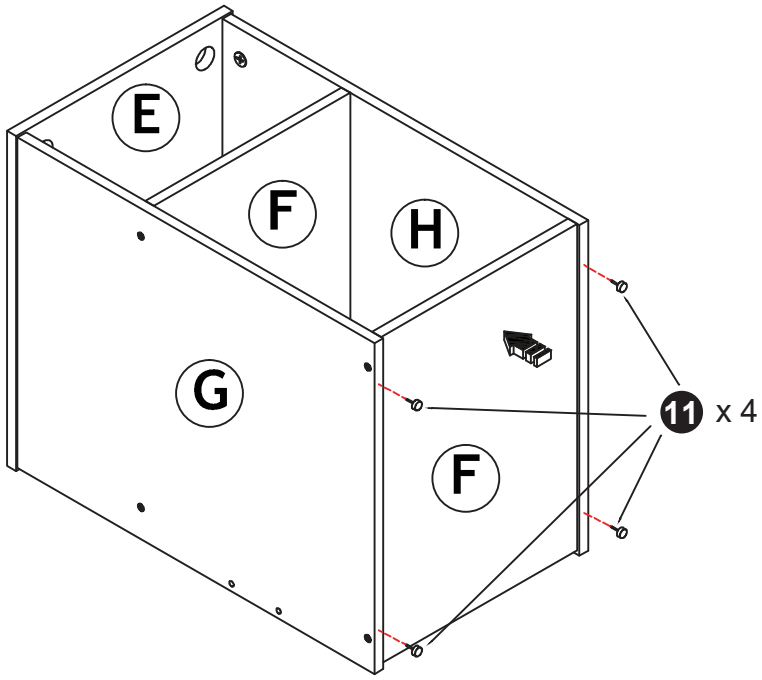

7

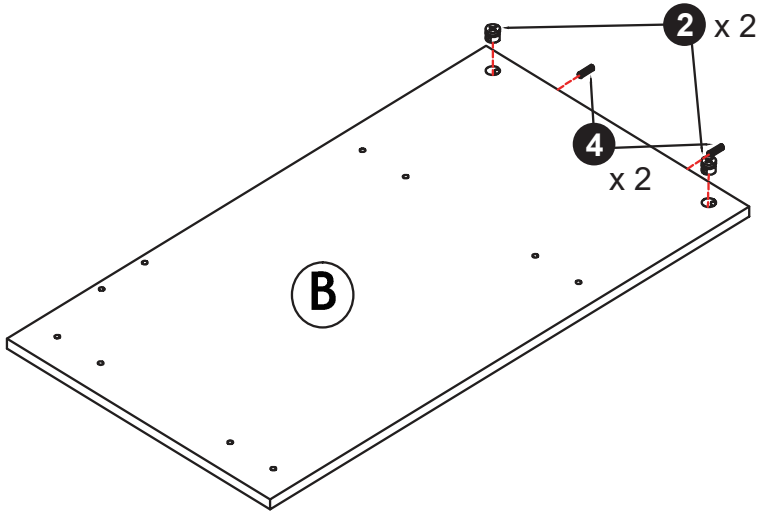

8

