15124/15126

Furinno KidKanac Stacking Storage

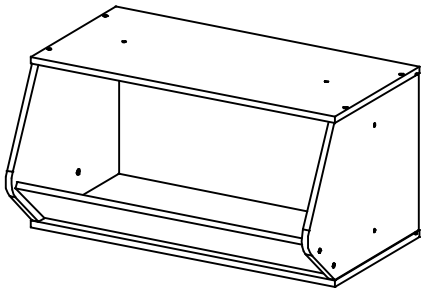

www.furinno.com

NEED HELP? For help with assembly, or if you are missing a part, please call Furinno's Customer Service, 1-773-299-8111 from Mon-Fri, 9am-5pm (CST) or email: support@furinno.com

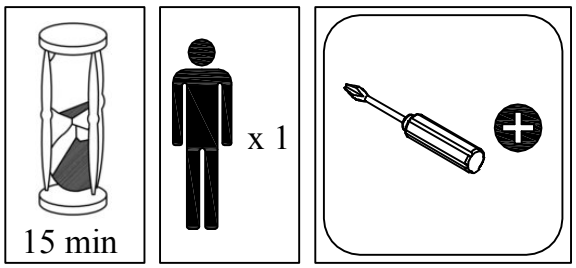

USEFUL HINTS BEFORE YOU START:

1. Read each step carefully before starting.
2. It is important that each step is performed in correct order to avoid difficulties.
3. Identify, sort and count the parts before assembly.
4. Assemble your furniture on packaging cardboard to prevent scratch or damage.
5. Clean the product with mild cleanser using soft damped cloth. Do not use harsh or abrasive cleanser.
6. Using uncompatible hardware might cause damage to product.

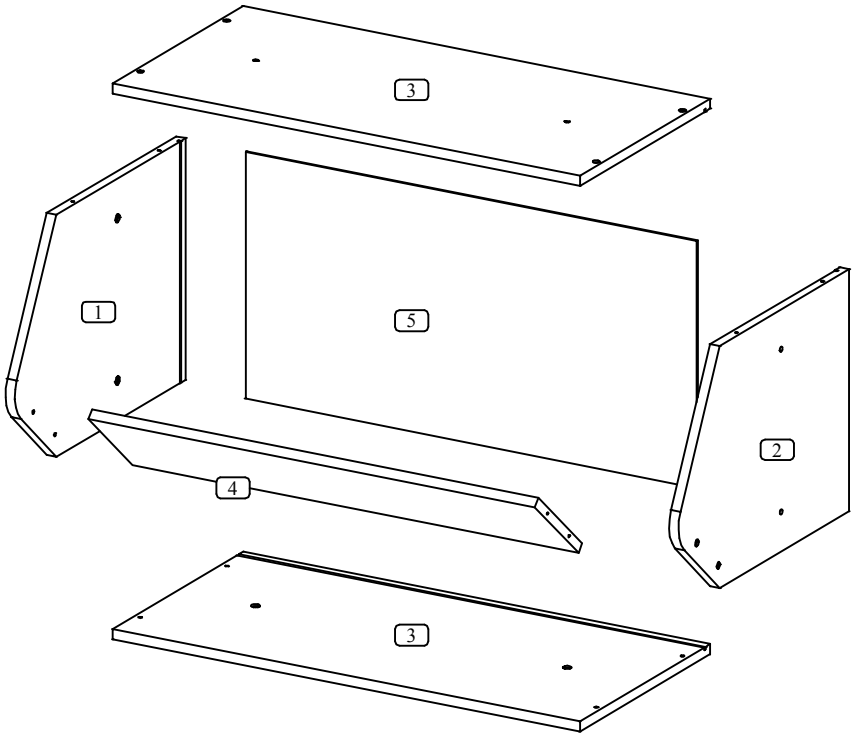

A	B	C	D	E
12 x	2 x	2 x	2 x	22 x
	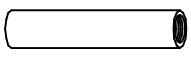			
ø8x35 mm	M4xø5x15 mm	M4xø6 mm	M4xø10 mm	ø14 mm

1

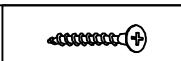

A = 4 x

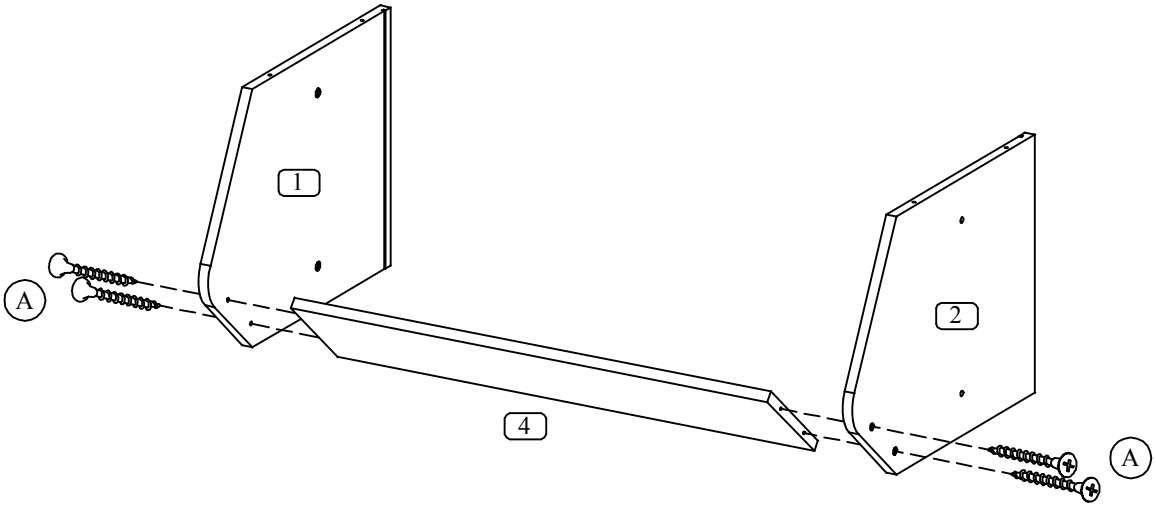

2

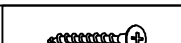

A = 4 x

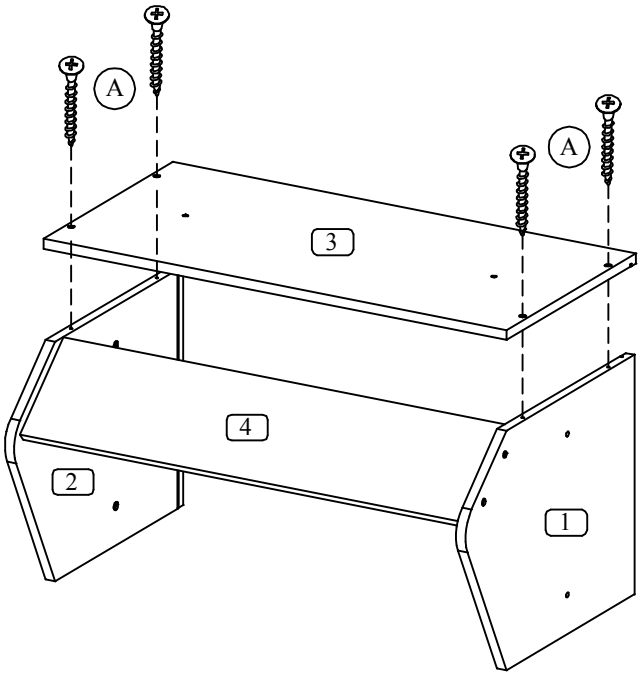

3

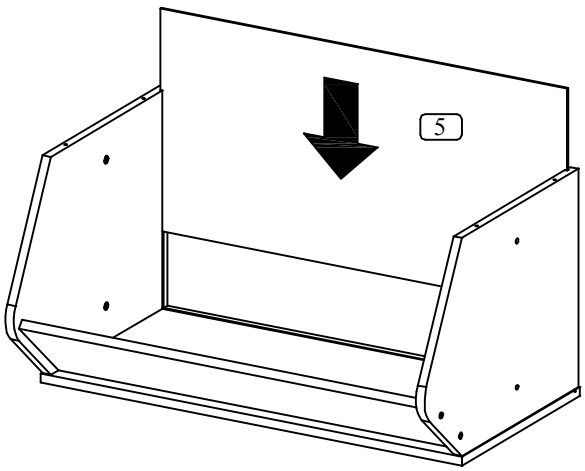

4

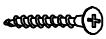

A = 4 x

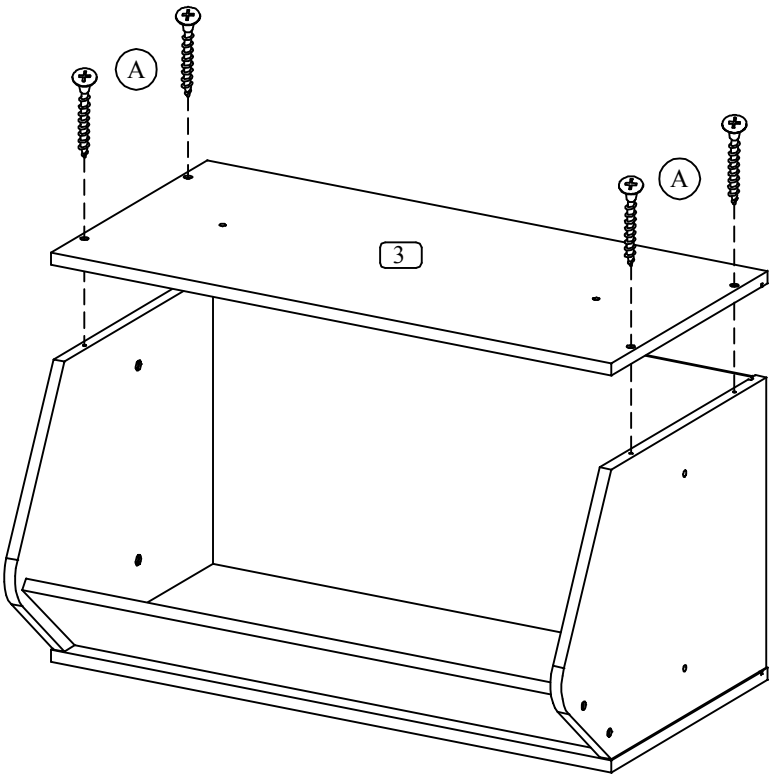

5

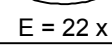

E = 22 x

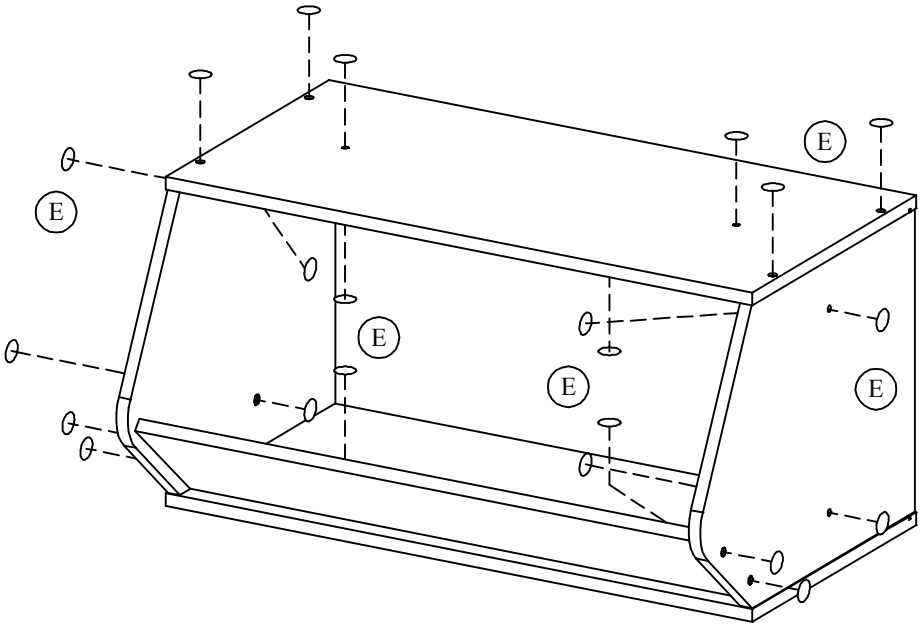

6

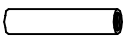
B = 2 x


C = 2 x


D = 2 x


E = 4 x

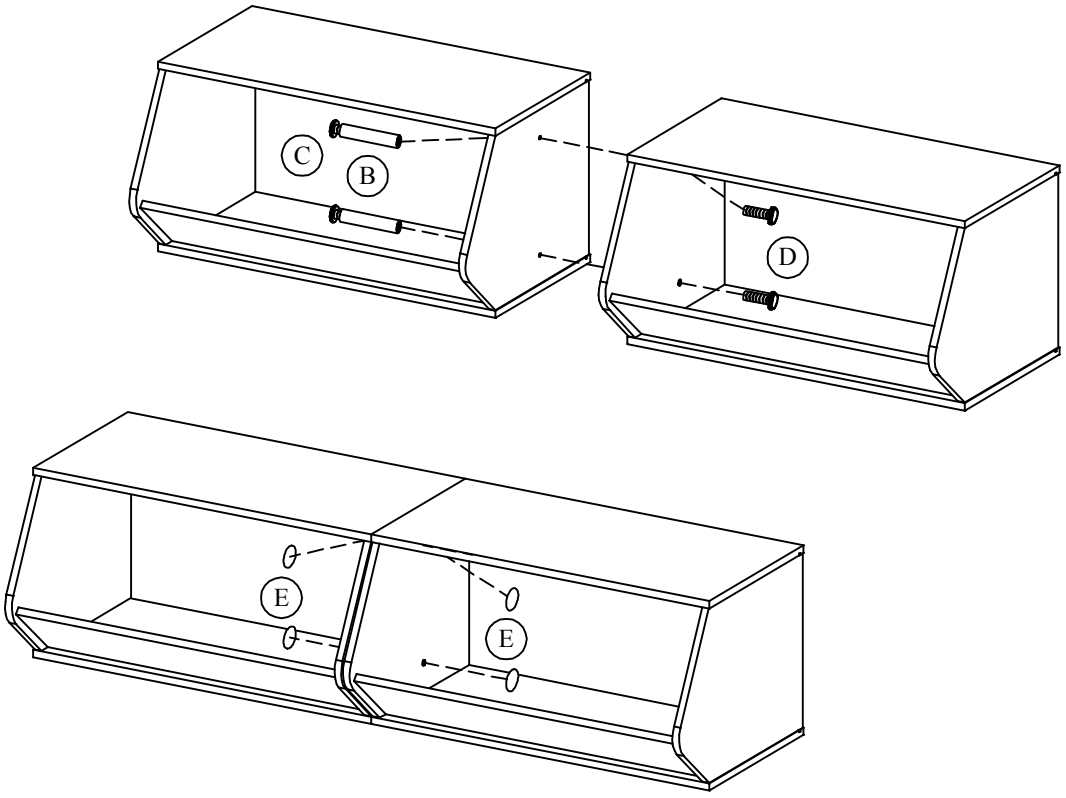

7

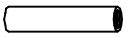
B = 2 x


C = 2 x


D = 2 x


E = 4 x

