16074

Furinno Media Tower

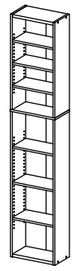

www.furinno.com

NEED HELP? For replacement requests or product inquiries, please contact our Customer Service Team by emailing us at **support@furinno.com**. Thank you for selecting Furrino!

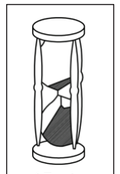

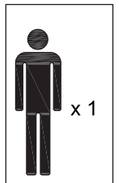

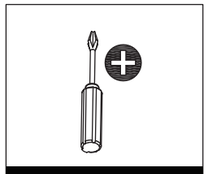

USEFUL HINTS BEFORE YOU START:

1. Read each step carefully before starting.
2. It is important that each step is performed in correct order to avoid difficulties.
3. Identify, sort and count the parts before assembly.
4. Assemble your furniture on packaging cardboard to prevent scratch or damage.
5. Clean the product with mild cleanser using soft damped cloth.
   Do not use harsh or abrasive cleanser.
6. Using uncompatible hardware might cause damage to product.

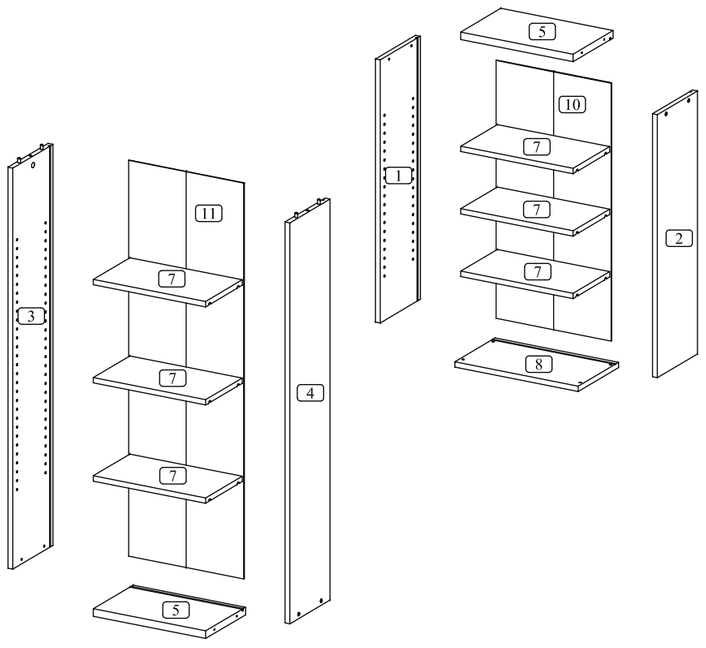

A 12 x	B 2 x	C 2 x	D 2 x	E 2 x	F 2 x
ø8x35 mm	ø15x9.6 mm	ø8.5x24 mm	ø6x16mm (RH)	ø6x1.1/4mm (FH)	148x18x3 mm
G 8 x	**H 8 x**	**I 24 x**	**J 1 x**	**K 8 x**	
ø6x16mm (FH)	14x13x10 mm	ø4.8x20.5 mm	ø25x105 mm	ø14 mm	

1

A = 4 x

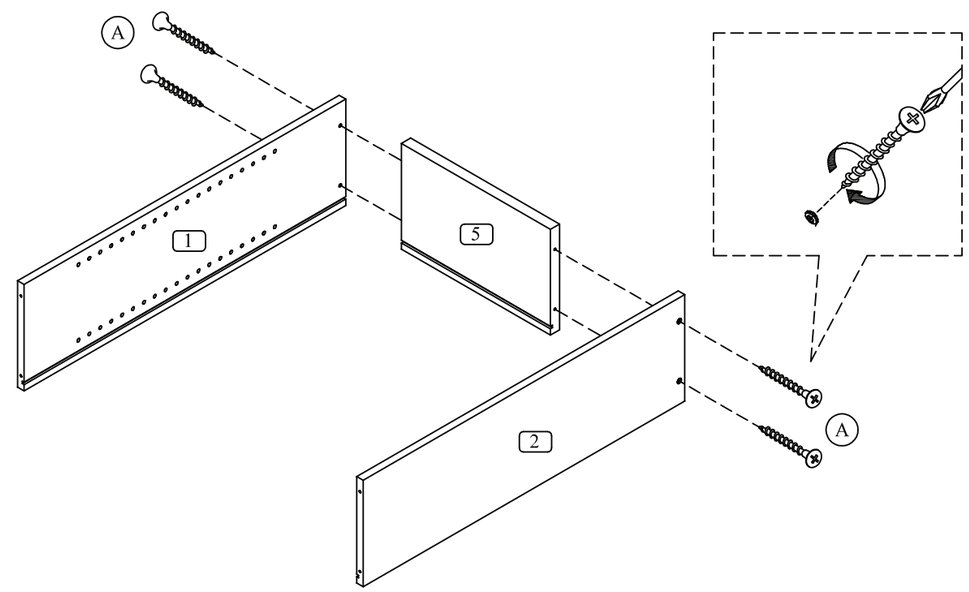

2

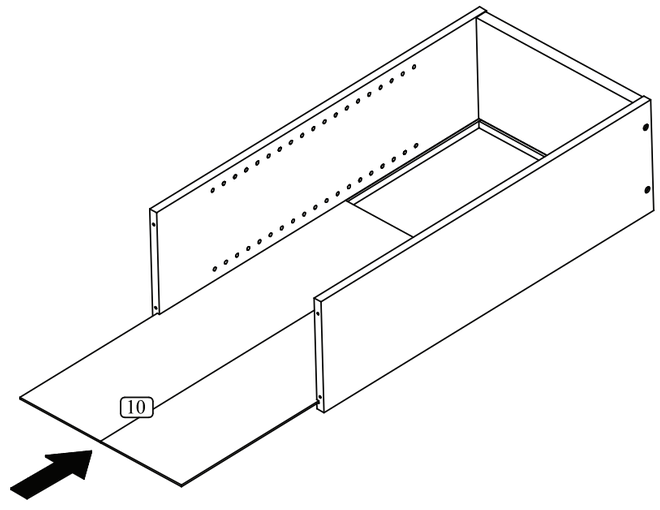

3

A = 4 x

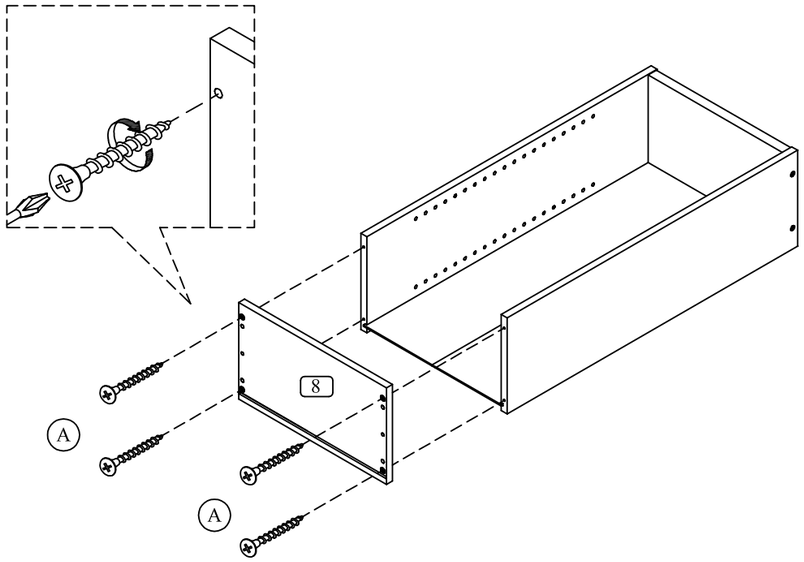

4

D = 2 x

F = 2 x

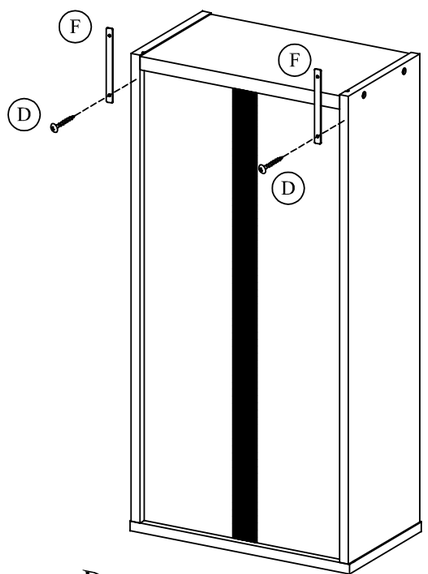

Back View

5

C = 2 x

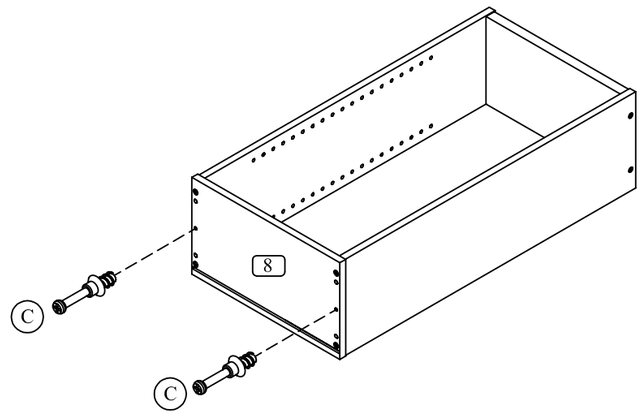

6

A = 4 x

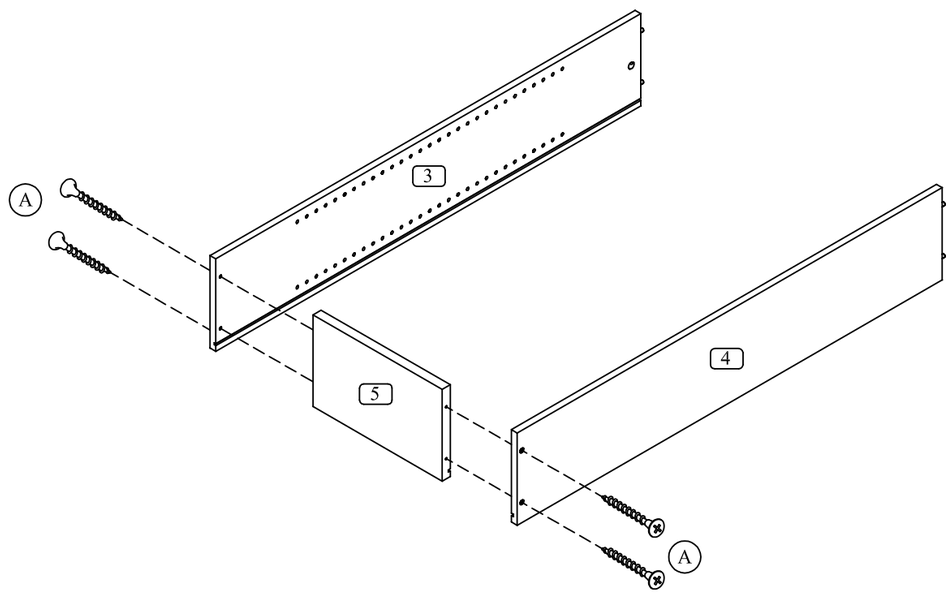

7

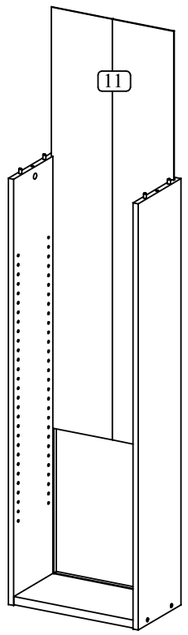

8

B = 2 x

J

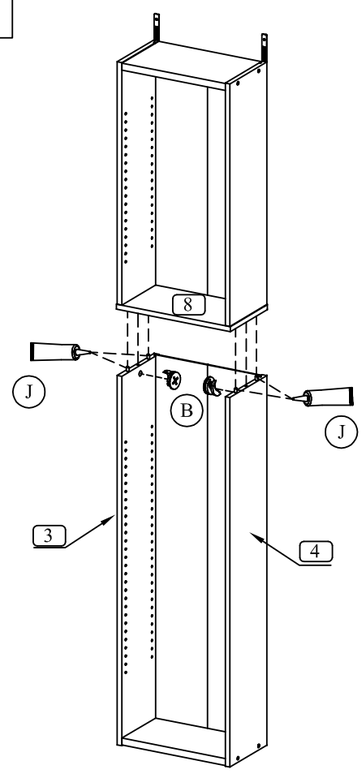

9

G = 8 x

H = 8 x

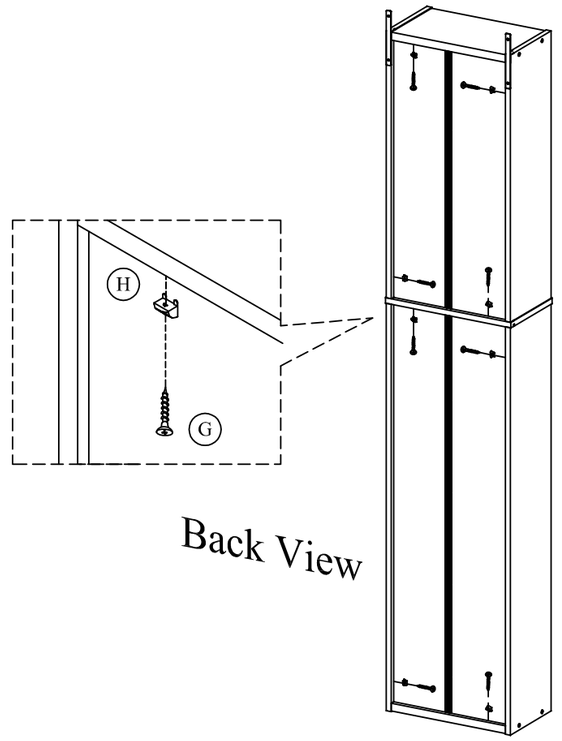

Back View

10

E = 2 x

I = 24 x

IMPORTANT:
In order to prevent product tip over, please secure the unit to the wall, as shown.

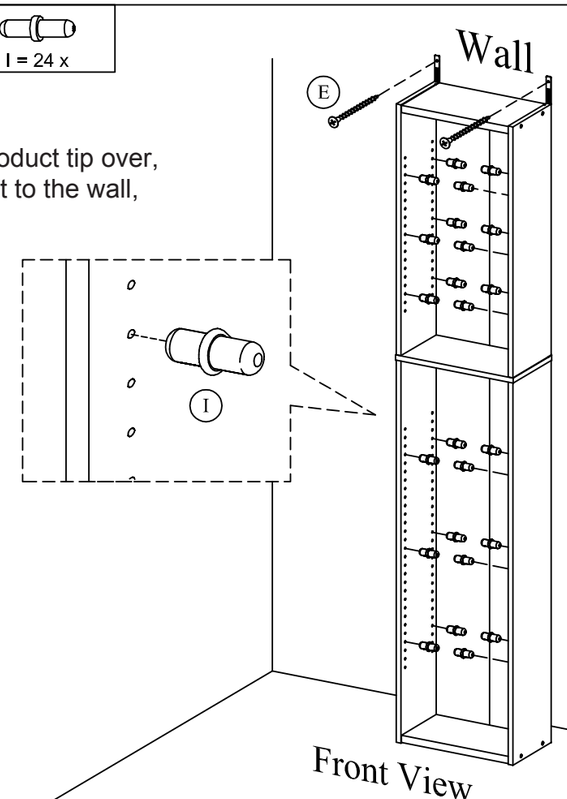

Front View

11

K = 8 x

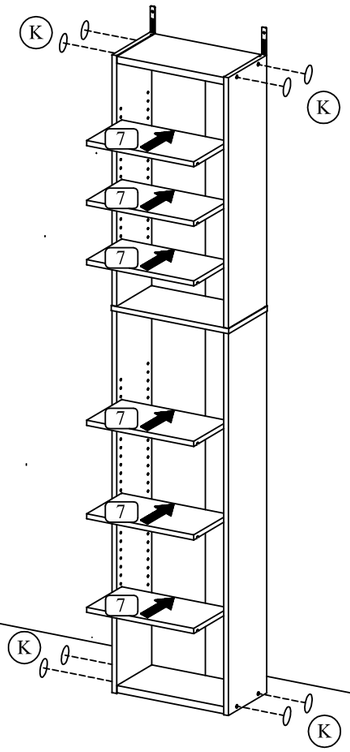

12

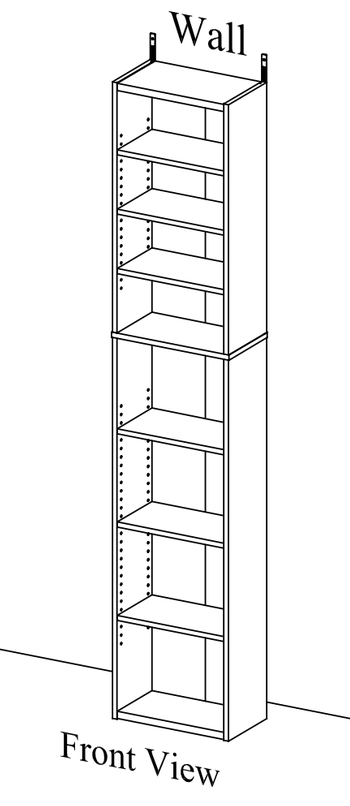

Front View