PLEASE FOLLOW BELOW INSTRUCTION TO PREVENT PRODUCT TIP OVER.

HARDWARE LIST			QTY
WALL PLUG	EYELET SCREW	CABLE TIE	2 SETS

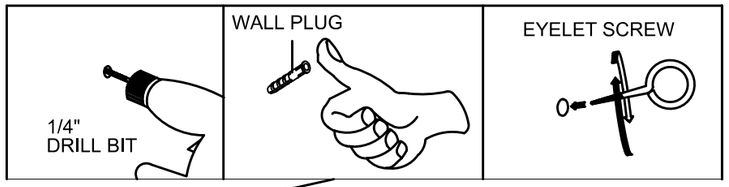

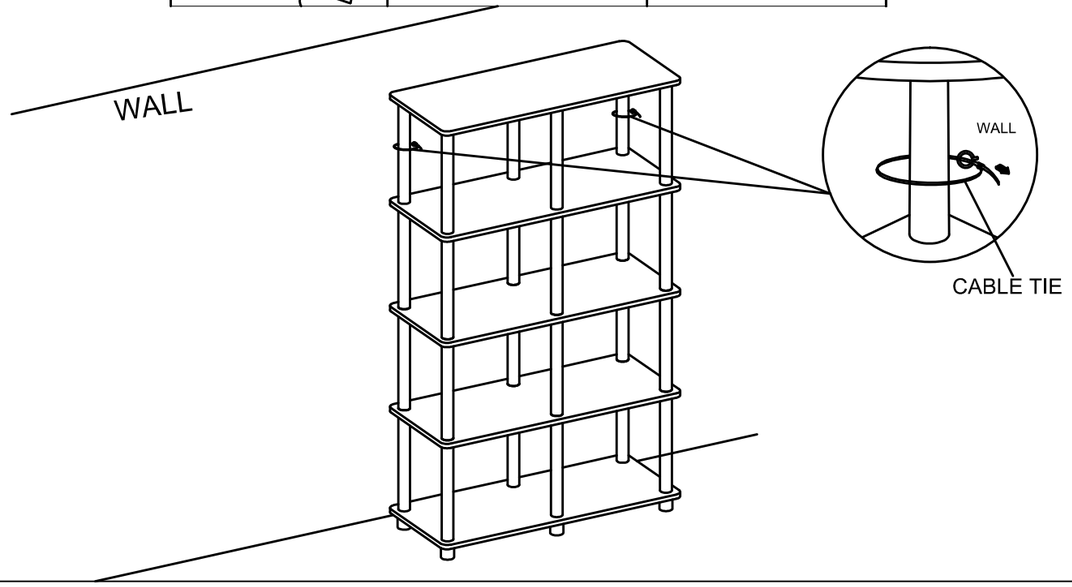

Recommended Maximum Weight

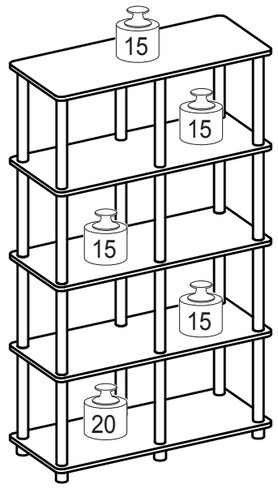

*Unit in Pound(lbs)

WARNING:

>This unit has been designed to support the maximum loads shown. Exceeding these load limits could cause sagging, instability, product collapse, and/or serious injury.

>DO NOT allow children to climb on unit.

>Put heavier items on lower shelves.

Furinno®
Fits Space. Fits Budget

00:25
Approx. 25 minutes

Recomm. 1 Person

No Tools Required

Assembly Instruction

Furinno Turn-N-Tube 8 Space Shelf

MODEL : **16105**

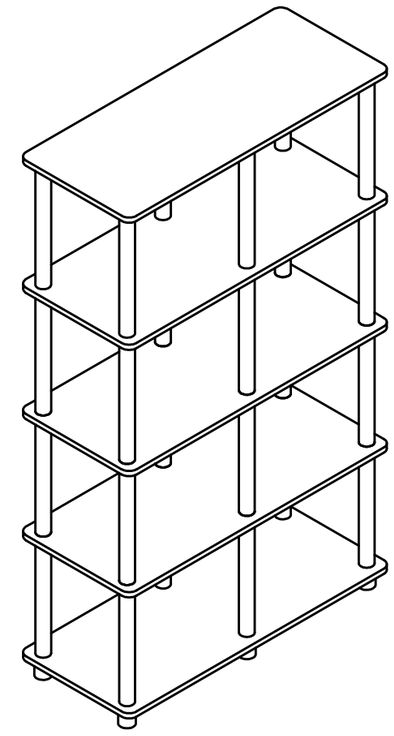

Customer Support

NEED HELP? For replacement requests or product inquiries, please contact our Customer Service Team by emailing us at **support@furinno.com**. Thank you for selecting Furinno!

www.furinno.com

HARDWARE & PARTS LIST

NO	PARTS LIST	QTY
A	TOP PANEL	1pc
B	SHELF PANEL	4pcs

NO	HARDWARE	QTY
1	ROUND LONG POLE	24pcs
2	ROUND LEG	6pcs

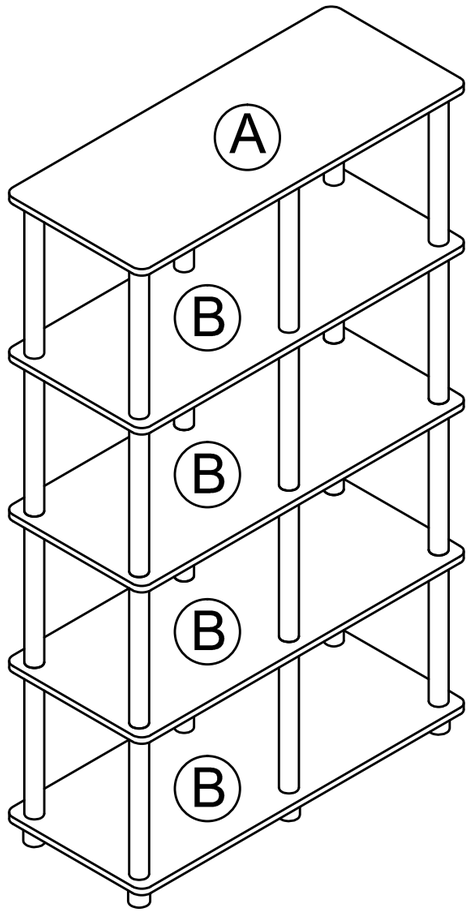

USEFUL HINTS BEFORE YOU START:

1. Read each step carefully before starting.
2. It is important that each step is performed in correct order to avoid difficulties.
3. Identify, sort and count the parts before assembly.
4. Assemble your furniture on packaging cardboard to prevent scratch or damage.
5. Clean the product with mild cleanser using soft damped cloth. Do not use harsh or abrasive cleanser.
6. Using uncompatible hardware might cause damage to product.

ASSEMBLY INSTRUCTIONS

BEFORE YOU BEGIN, PLEASE READ ASSEMBLY INSTRUCTION CAREFULY, FOLLOW THEM STEP BY STEP.

STEP 1

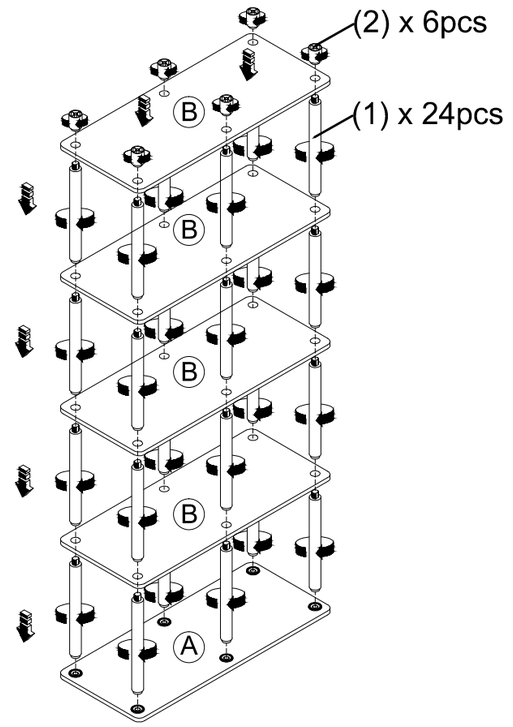

STEP 2

