STEP 11
ATTACH NAIL LEGS (5) TO PANELS (E) , (F) & (G), AS SHOWN.

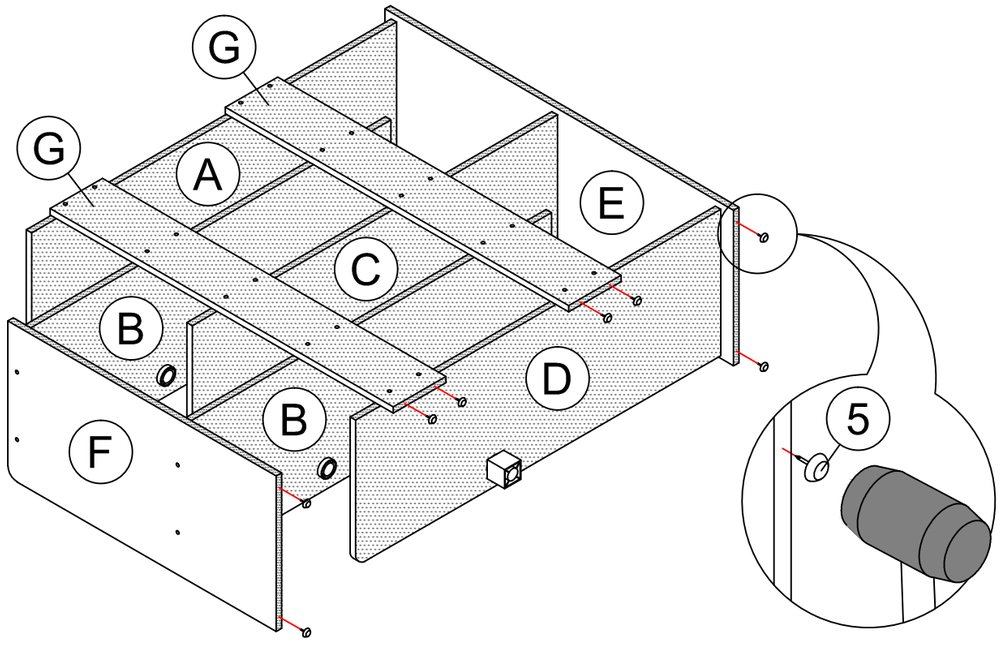

Recommended Maximum Weight

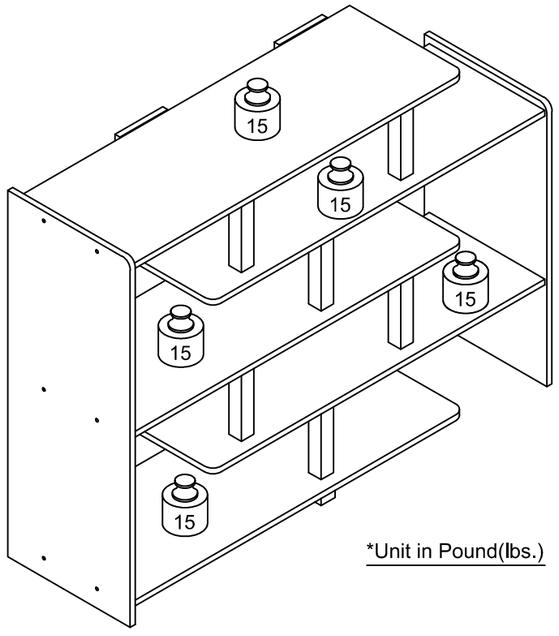

*Unit in Pound(lbs.)

WARNING:

>This unit has been designed to support the maximum loads shown. Exceeding these load limits could cause sagging, instability, product collapse, and/or serious injury.

>DO NOT allow children to climb on unit.

> Put heavier items on lower shelves.

Furinno®
Fits Space. Fits Budget

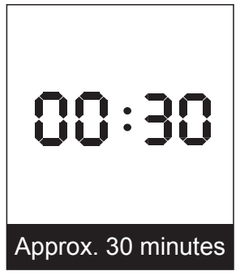

Approx. 30 minutes

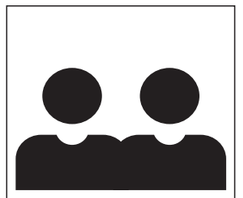
Recomm. 2 Persons

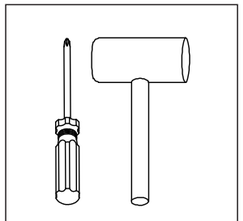
Tools Required

Assembly Instruction

Furinno Turn-N-Tube 5 Tier Storage Shelf

MODEL : **17035**

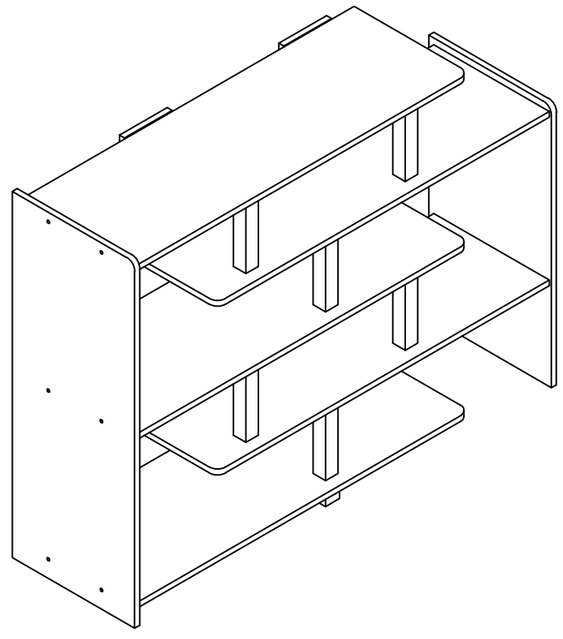

Customer Support

NEED HELP? For replacement requests or product inquiries, please contact our Customer Service Team by emailing us at **support@furinno.com**. Thank you for selecting Furinno!

www.furinno.com

1703520181005

HARDWARE & PARTS LIST

NO	PARTS LIST	QTY
A	TOP PANEL	1pc
B	SECOND & FOURTH PANEL	2pcs
C	THIRD PANEL	1pc
D	BOTTOM PANEL	1pc
E	LEFT SIDE PANEL	1pc
F	RIGHT SIDE PANEL	1pc
G	BACK PANEL	2pcs

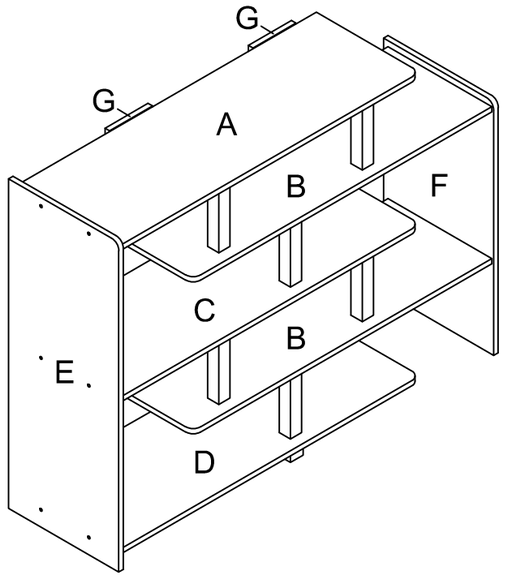

NO	HARDWARE LIST	QTY
1	SQUARE POLE	6pcs
2	SMALL ROUND LEG	5pcs
3	SQUARE LEG	1pc
4	C/B SCREW	30pcs
5	NAIL LEG	8pcs

USEFUL HINTS BEFORE YOU START:

1. Read each step carefully before starting.
2. It is important that each step is performed in correct order to avoid difficulties.
3. Identify, sort and count the parts before assembly.
4. Assemble your furniture on packaging cardboard to prevent scratch or damage.
5. Clean the product with mild cleanser using soft damped cloth. Do not use harsh or abrasive cleanser.
6. Using uncompatible hardware might cause damage to product.

STEP 9

ATTACH PANEL (D) TO PANEL (E) USING SCREWS (4) AND TIGHTEN IT, AS SHOWN.

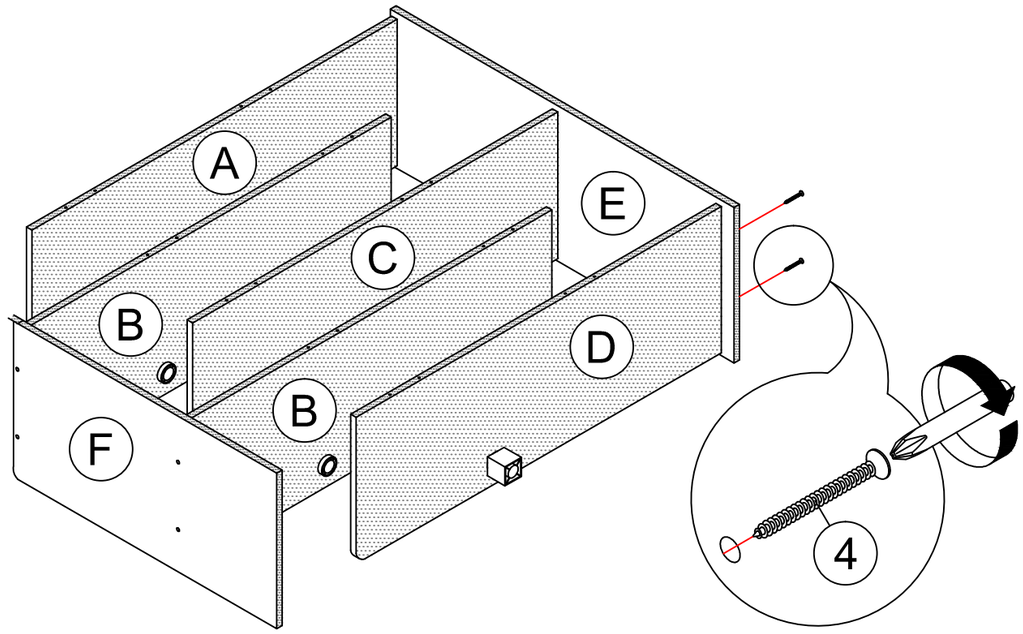

STEP 10

ATTACH PANELS (G) TO PANELS (A) , (B) , (C) & (D) USING SCREWS (4) AND TIGHTEN IT, AS SHOWN.

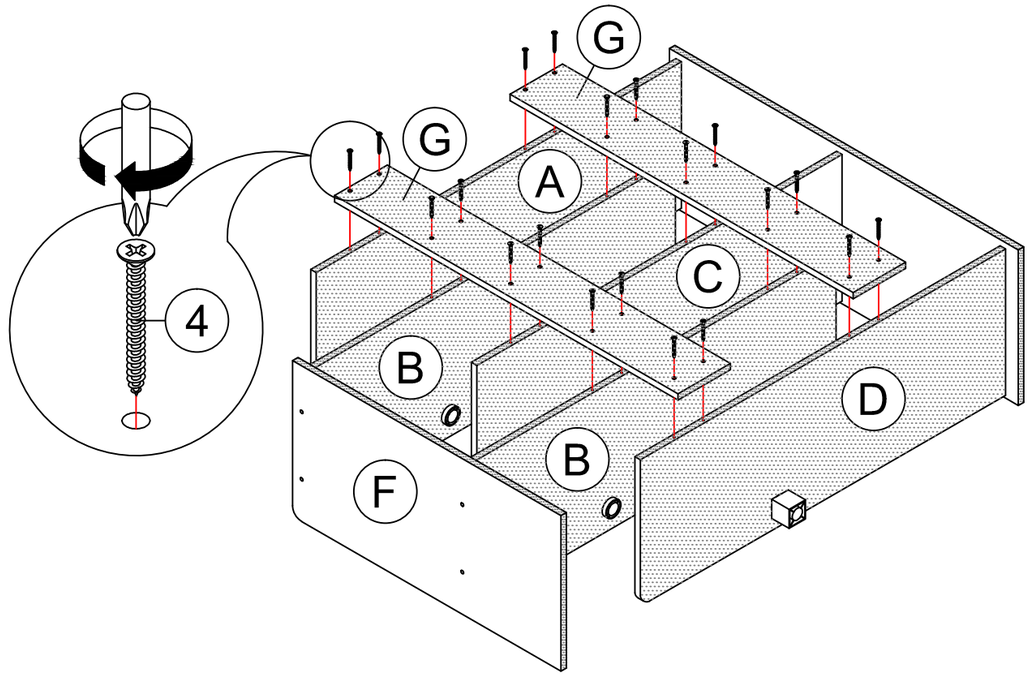

STEP 7
- ATTACH PANEL (B) TO PANEL (F) USING SCREWS (4) AND TIGHTEN IT, AS SHOWN.
- ATTACH SQUARE POLE (1) TO PANEL (B) AND TIGHTEN IT, AS SHOWN.

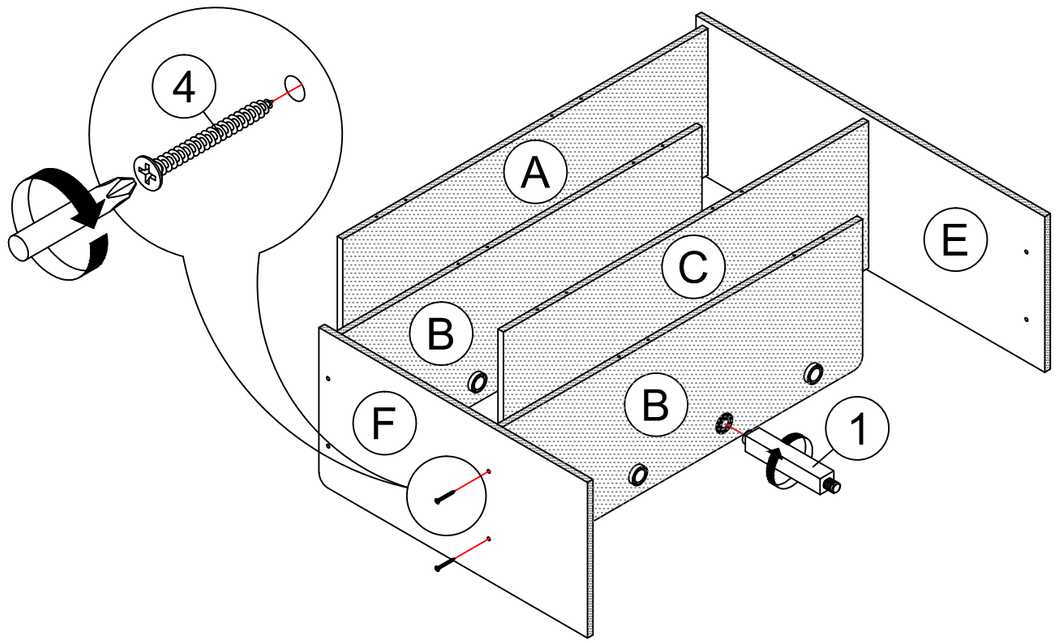

STEP 8
ATTACH PANEL (D) TO PANEL (B) USING SQUARE LEG (3) TO SQUARE POLES AND TIGHTEN IT, AS SHOWN.

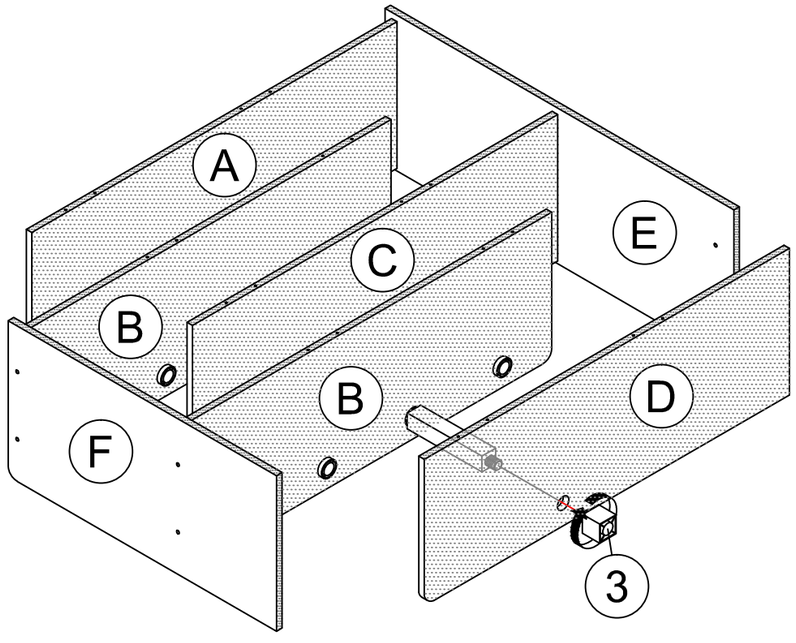

ASSEMBLY INSTRUCTIONS

BEFORE YOU BEGIN, PLEASE READ ASSEMBLY INSTRUCTION CAREFULY, FOLLOW THEM STEP BY STEP.

STEP 1
- ATTACH PANEL (E) TO PANEL (A) USING SCREWS (4) AND TIGHTEN IT, AS SHOWN.
- ATTACH SQUARE POLES (1) TO PANEL (A) AND TIGHTEN IT, AS SHOWN.

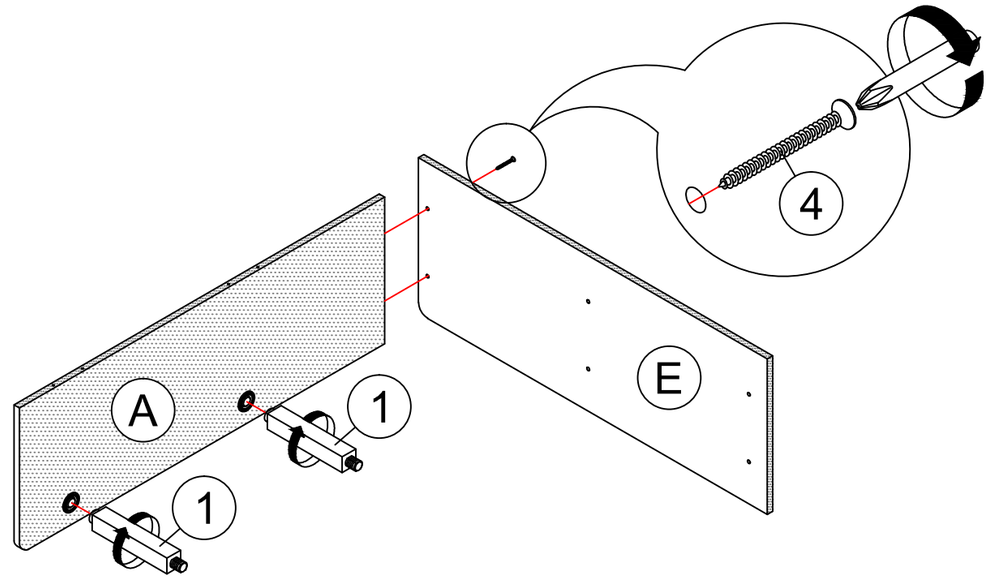

STEP 2
ATTACH PANEL (B) TO PANEL (A) USING SMALL LEGS (2) TO SQUARE POLES AND TIGHTEN IT, AS SHOWN.

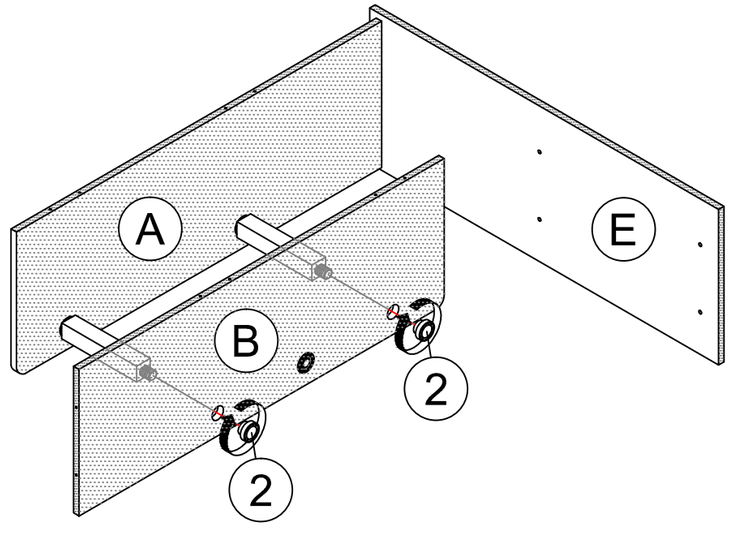

STEP 3
- ATTACH PANEL (F) TO PANEL (B) USING SCREWS (4) AND TIGHTEN IT, AS SHOWN.
- ATTACH SQUARE POLE (1) TO PANEL (B) AND TIGHTEN IT, AS SHOWN.

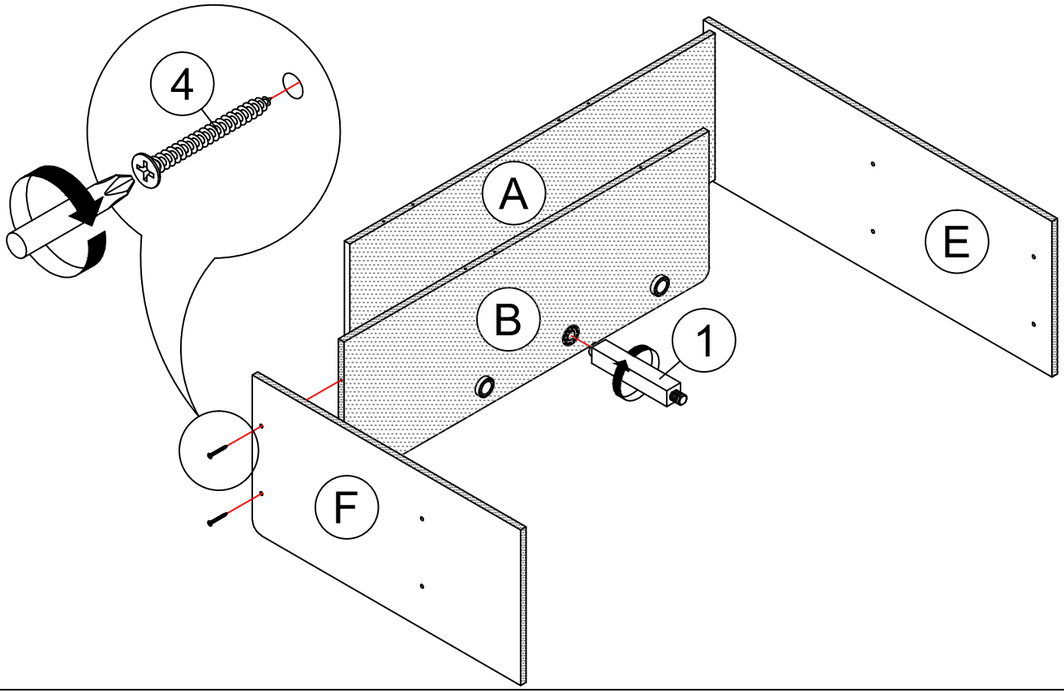

STEP 4
ATTACH PANEL (C) TO PANEL (B) USING SMALL LEGS (2) TO SQUARE POLES AND TIGHTEN IT, AS SHOWN.

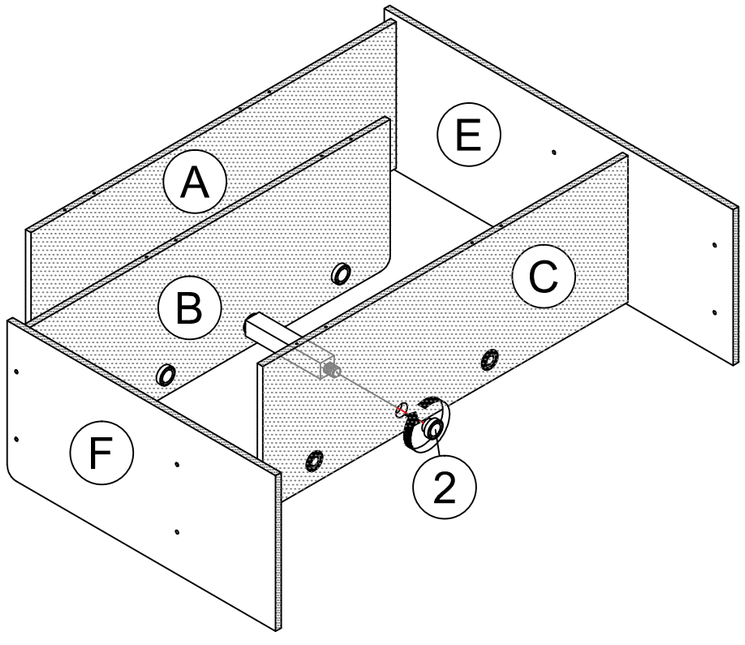

STEP 5
- ATTACH PANEL (C) TO PANEL (E) USING SCREWS (4) AND TIGHTEN IT, AS SHOWN.
- ATTACH SQUARE POLES (1) TO PANEL (C) AND TIGHTEN IT, AS SHOWN.

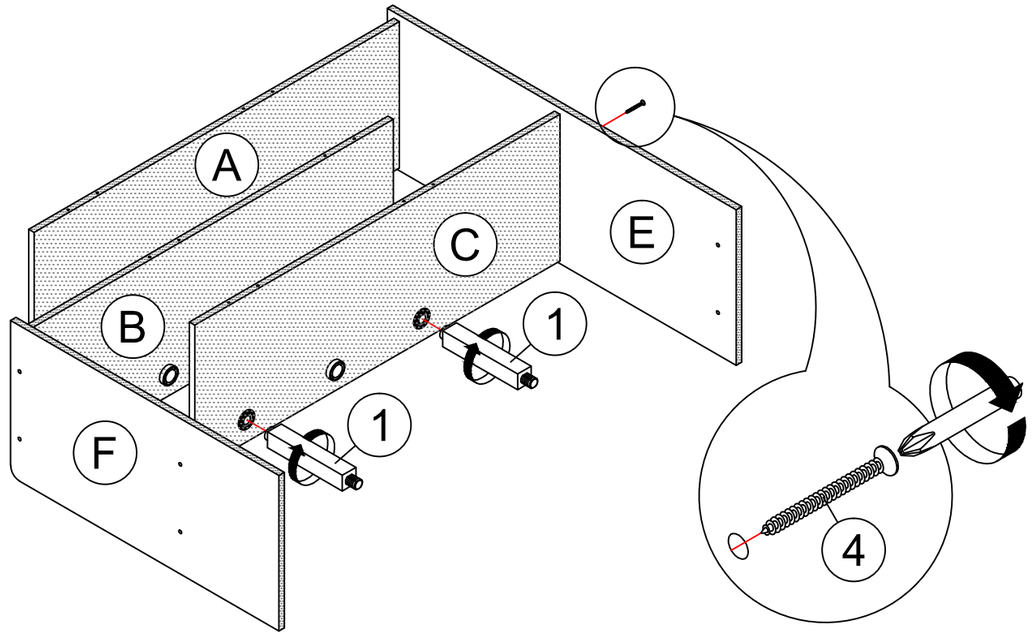

STEP 6
ATTACH PANEL (B) TO PANEL (C) USING SMALL LEGS (2) TO SQUARE POLES AND TIGHTEN IT, AS SHOWN.

