STEP 4

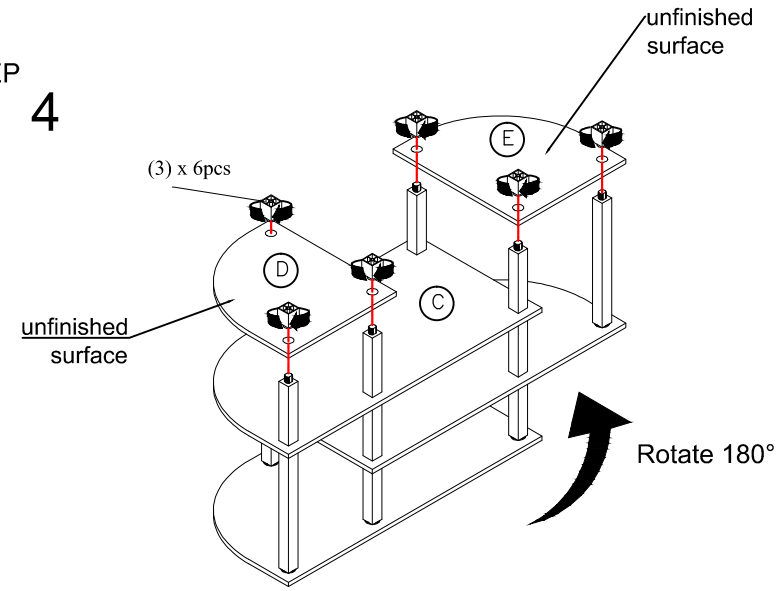

Recommended Maximum Weight

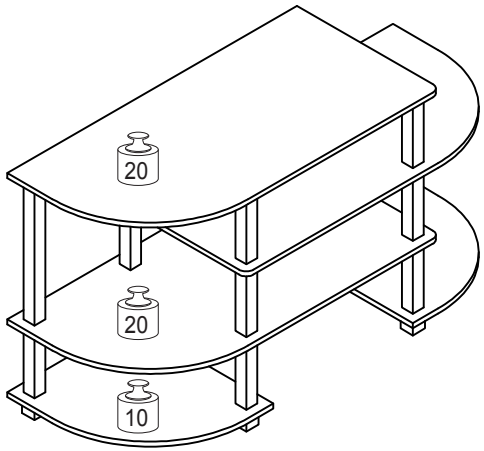

*Unit in Pound(lbs)

WARNING:

>This unit has been designed to support the maximum loads shown. Exceeding these load limits could cause sagging, instability, product collapse, and/or serious injury.

>DO NOT allow children to climb on unit.

Furinno®
Fits Space. Fits Budget

Assembly Instruction

Furinno Turn-S-Tube Simplistic Entertainment Center

MODEL : **17046**

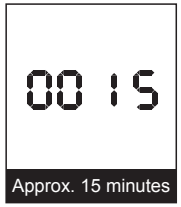

Approx. 15 minutes


Recomm. 1 Person


No Tools Required

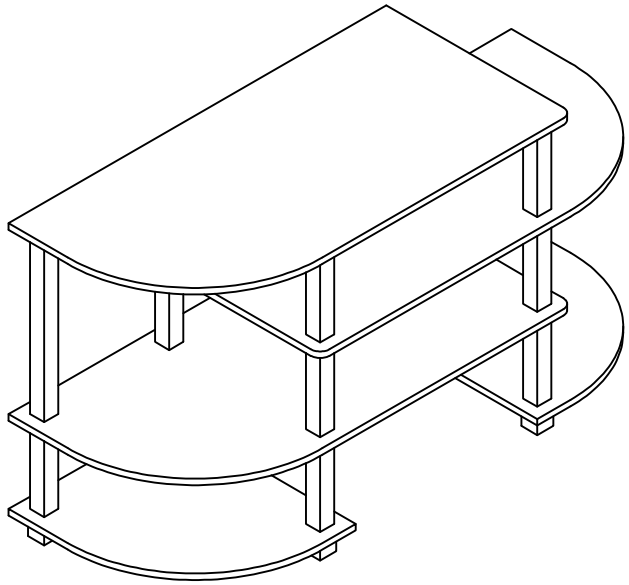

Customer Support

NEED HELP? For replacement requests or product inquiries, please contact our Customer Service Team by emailing us at **support@furinno.com**. Thank you for selecting Furinno!

www.furinno.com

1704620180829

HARDWARE & PART LIST

NO	PARTS LIST	QTY
A	TOP PANEL	1pc
B	SECOND PANEL	1pc
C	THIRD PANEL	1pc
D	BOTTOM LEFT PANEL	1pc
E	BOTTOM RIGHT PANEL	1pc

NO	HARDWARE	QTY
1	LONG SQUARE POLE	2pcs
2	SHORT SQUARE POLE	13pcs
3	SQUARE LEG	6pcs

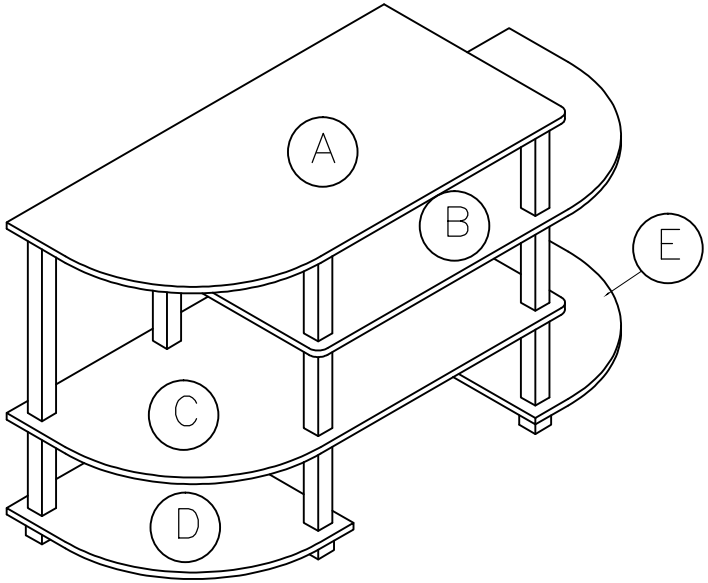

USEFUL HINTS BEFORE YOU START:

1. Read each step carefully before starting.
2. It is important that each step is performed in correct order to avoid difficulties.
3. Identify, sort and count the parts before assembly.
4. Assemble your furniture on packaging cardboard to prevent scratch or damage.
5. Clean the product with mild cleanser using soft damped cloth. Do not use harsh or abrasive cleanser.
6. Using uncompatible hardware might cause damage to product.

STEP 1

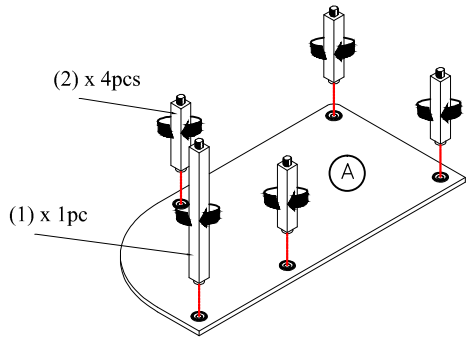

STEP 2

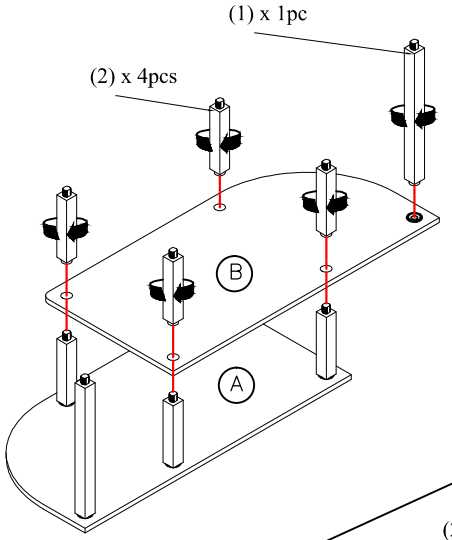

STEP 3

