STEP 6

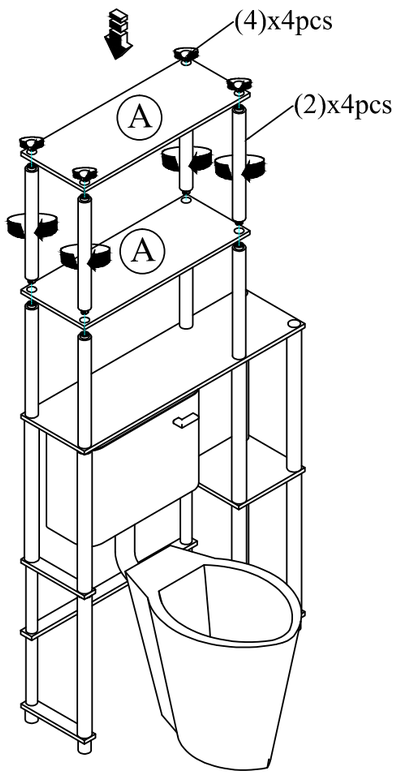

STEP 7

PLEASE FOLLOW BELOW INSTRUCTION TO PREVENT PRODUCT TIP OVER.

HARDWARE LIST			QTY
WALL PLUG	EYELET SCREW	CABLE TIE	2 SETS

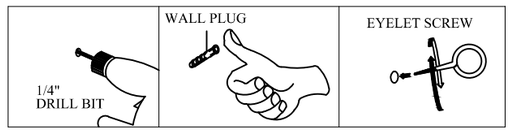

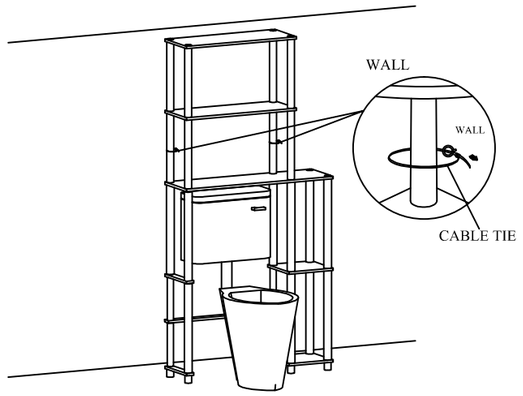

Recommended Maximum Weight

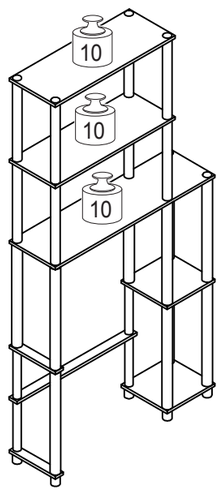

*Unit in Pound(lbs)

WARNING:

>This unit has been designed to support the maximum loads shown. Exceeding these load limits could cause sagging, instability, product collapse, and/or serious injury.

>DO NOT allow children to climb on unit.

>Put heavier items on lower shelves.

Furinno®
Fits Space. Fits Budget

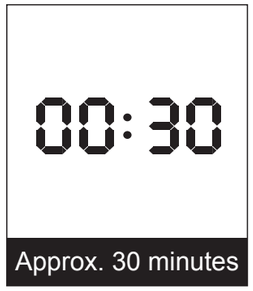





Assembly Instruction

Furinno Toilet Space Saver

MODEL : **17050**

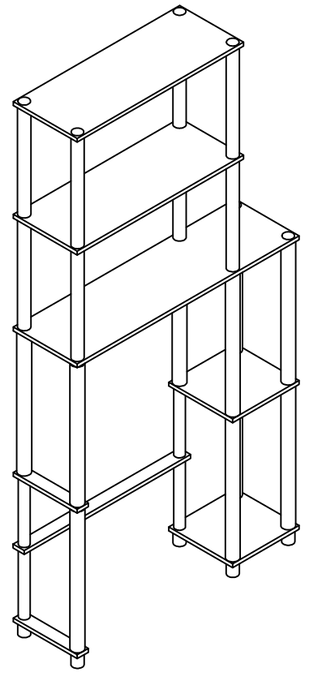

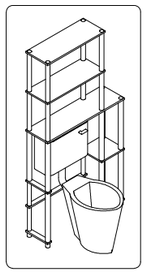

Customer Support

NEED HELP? For replacement requests or product inquiries, please contact our Customer Service Team by emailing us at **support@furinno.com**. Thank you for selecting Furinno!

www.furinno.com

1705020180731

HARDWARE & PARTS LIST

NO	HARDWARE LIST	QTY
1	EXTRA LONG POLE	10pcs
2	LONG POLE	8pcs
3	MIDDLE POLE	4pcs
4	TOP CAP	6pcs
5	LEG	6pcs
6	ROUND RING	4pcs

NO	PARTS LIST	QTY
A	TOP / SHELF PANEL	2pcs
B	SHORT SHELF PANEL	2pcs
C	LONG SHELF PANEL	1pc
D	SHORT SUPPORT BAR	2pcs
E	LONG SUPPORT BAR	1pc

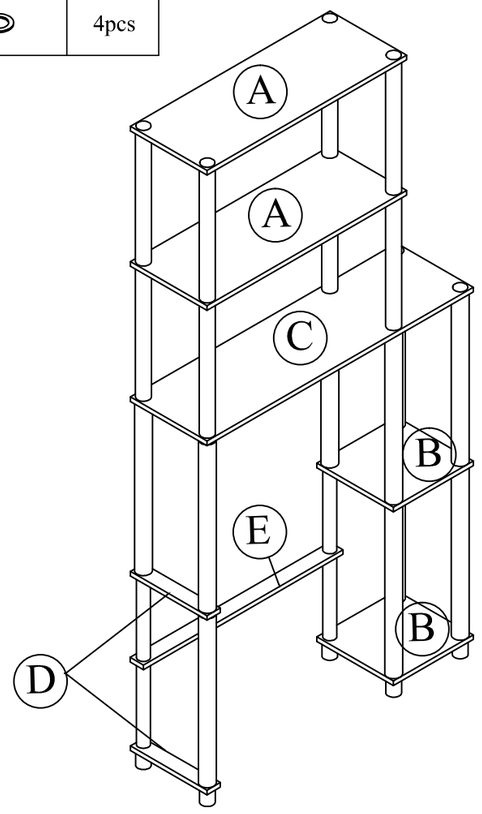

USEFUL HINTS BEFORE YOU START:

1. Read each step carefully before starting.
2. It is important that each step is performed in correct order to avoid difficulties.
3. Identify, sort and count the parts before assembly.
4. Assemble your furniture on packaging cardboard to prevent scratch or damage.
5. Clean the product with mild cleanser using soft damped cloth. Do not use harsh or abrasive cleanser.
6. Using uncompatible hardware might cause damage to product.

ASSEMBLY INSTRUCTIONS

BEFORE YOU BEGIN, PLEASE READ ASSEMBLY INSTRUCTION CAREFULY, FOLLOW THEM STEP BY STEP.

STEP 1

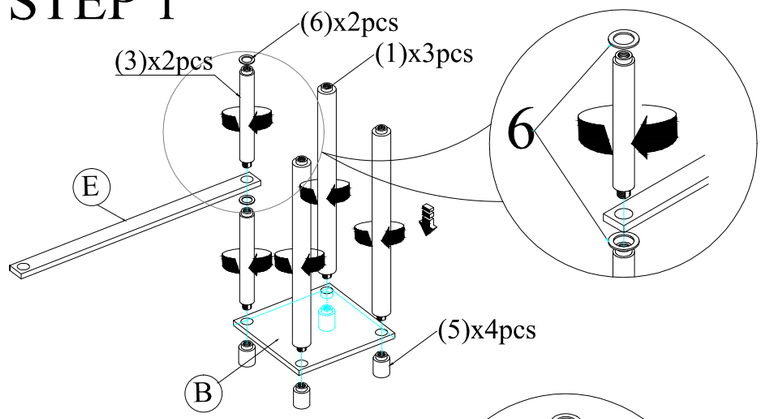

STEP 2

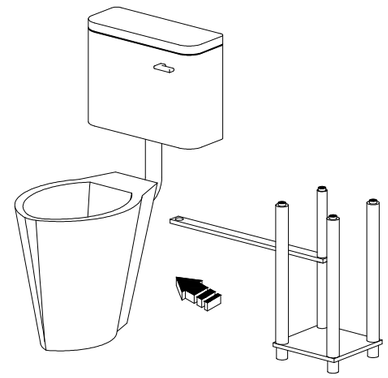

STEP 3

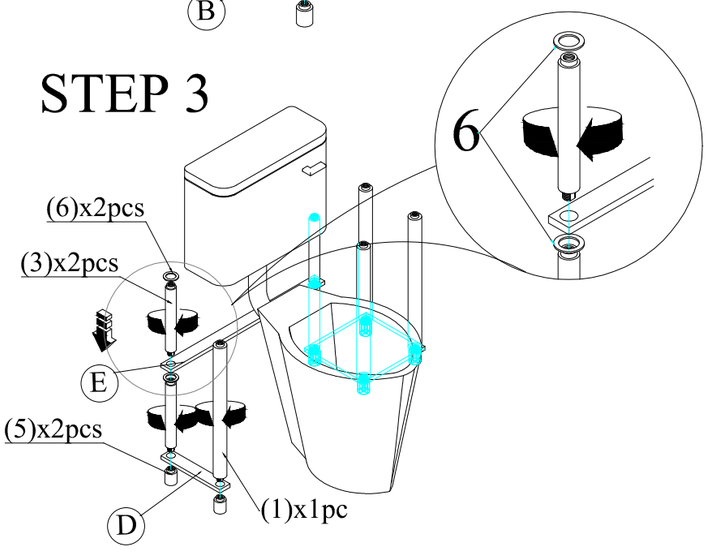

STEP 4

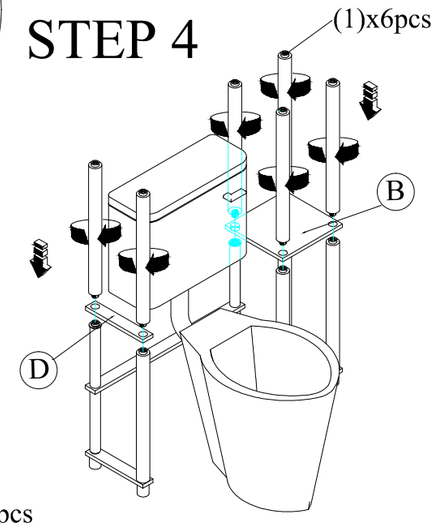

STEP 5

