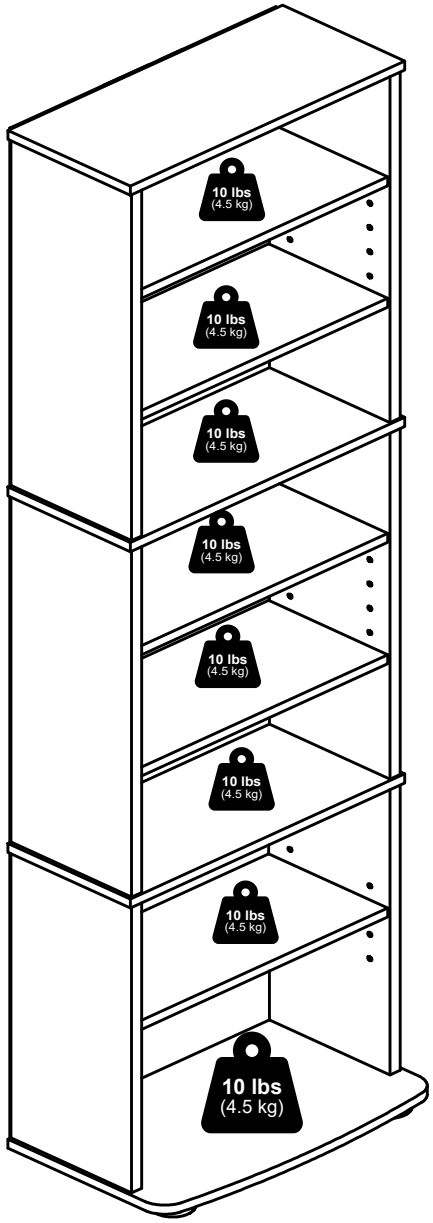

Furinno®

Fits Space, Fits Budget



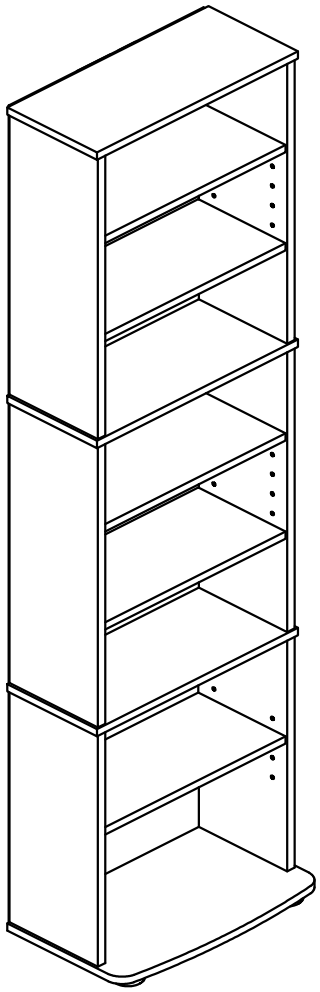

MODEL: 17057

support@furinno.com

www.furinno.com

1705720230814

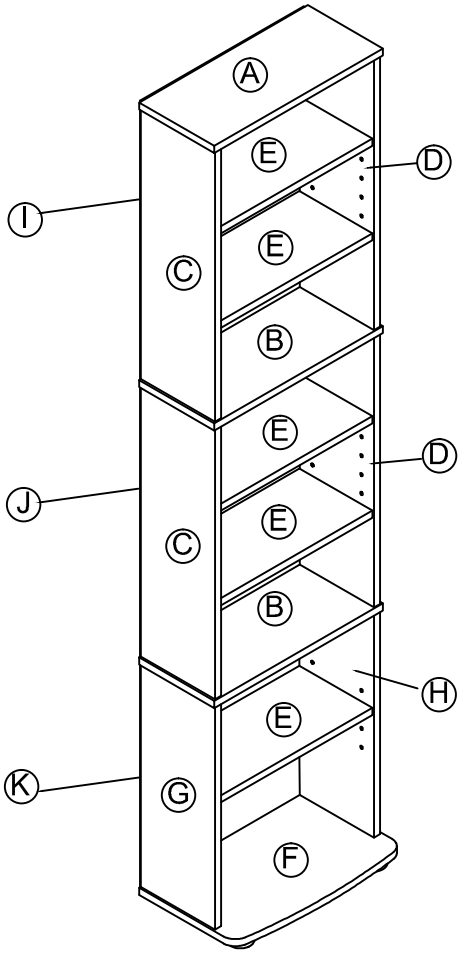

1 x 6 1a 1b M6 x 31mm 15mm	**2** x 8 M4 x32mm	**3** x 6 6 x 20mm	**4** x 20 5 x 6 x 16mm
5 x 4 Ø40 x 14mm	**6** x 30 2.5 x 18mm	**7** x 1	**8** x 1

9

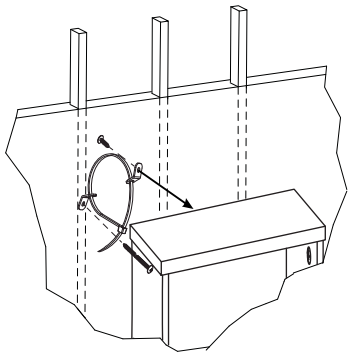

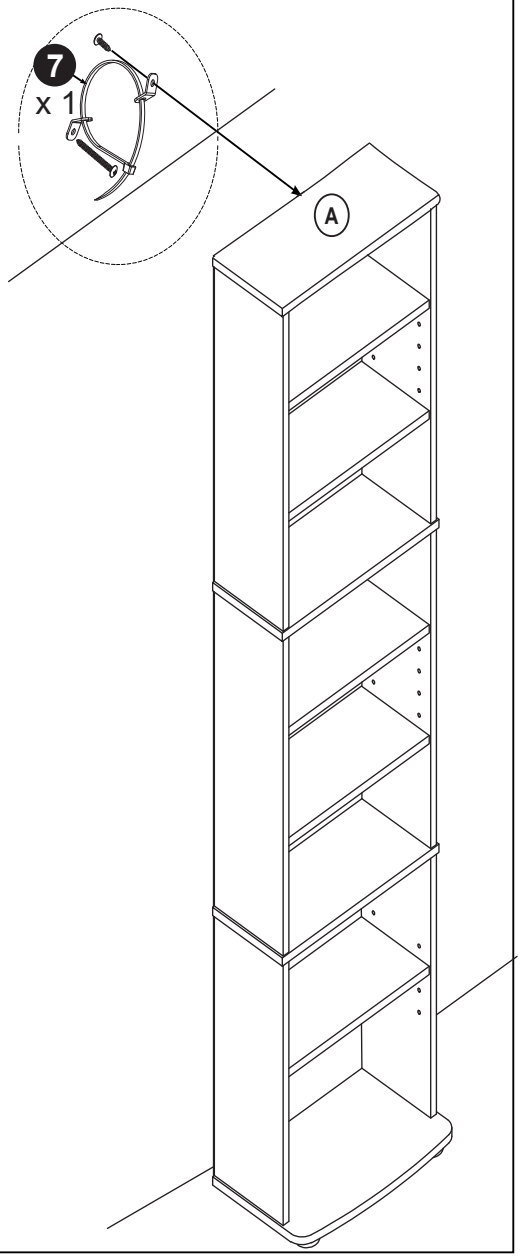

8

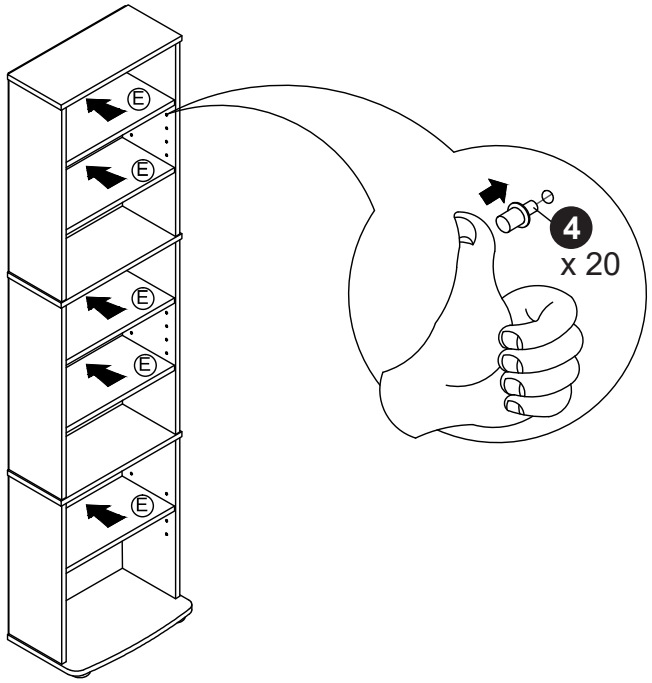

1

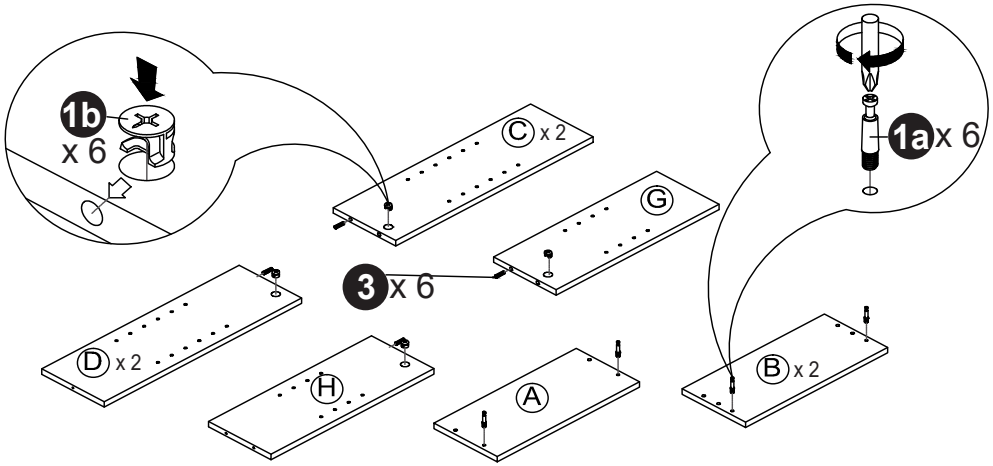

2

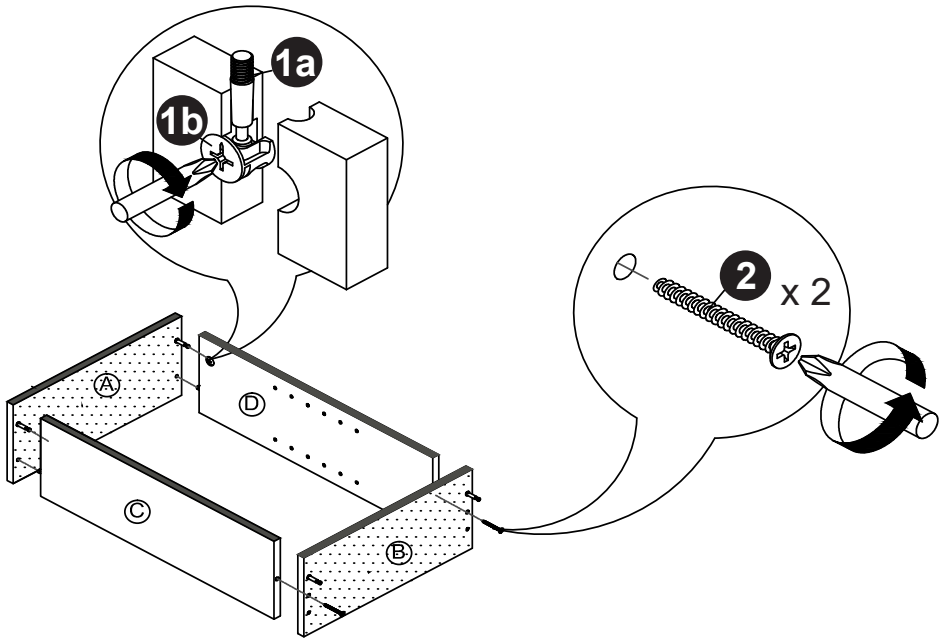

7

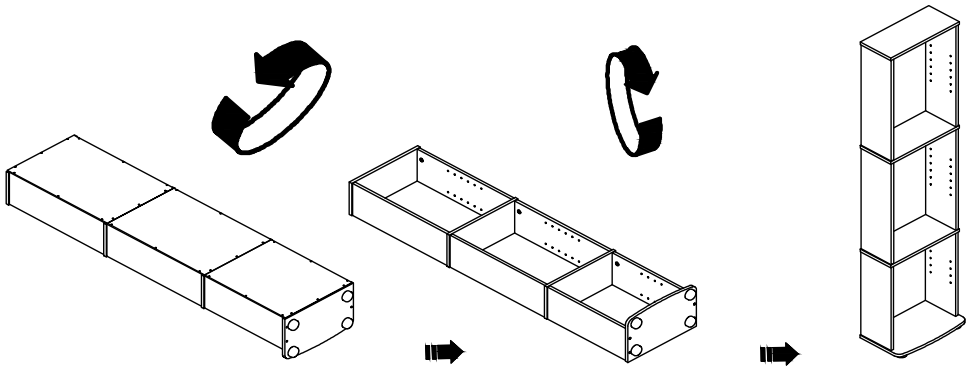

6

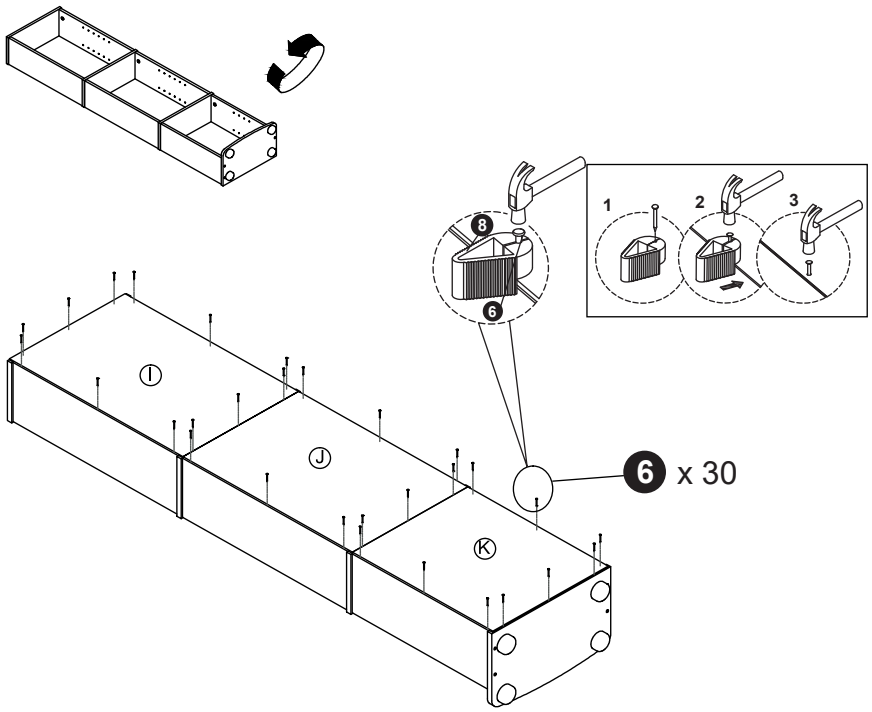

3

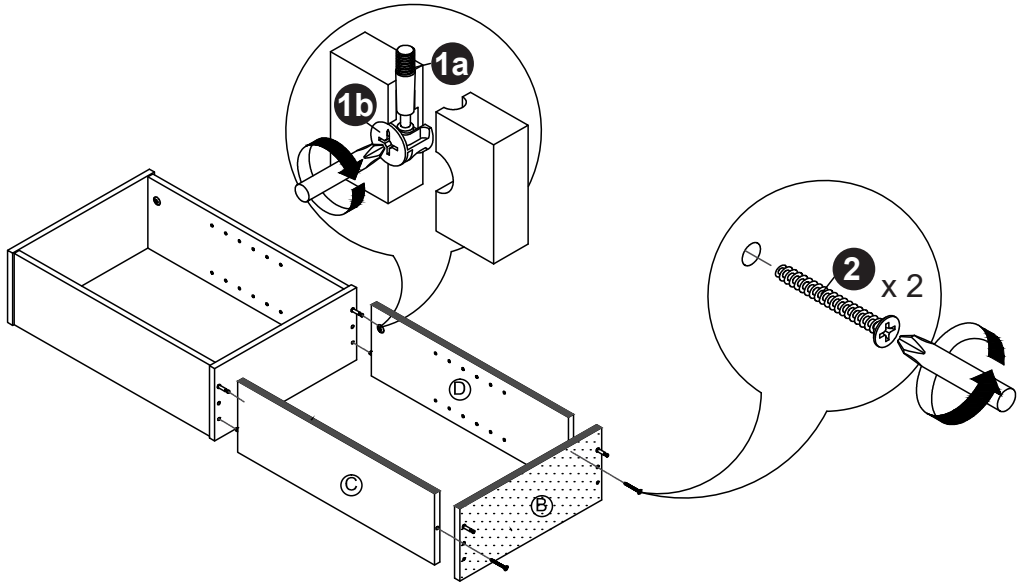

4

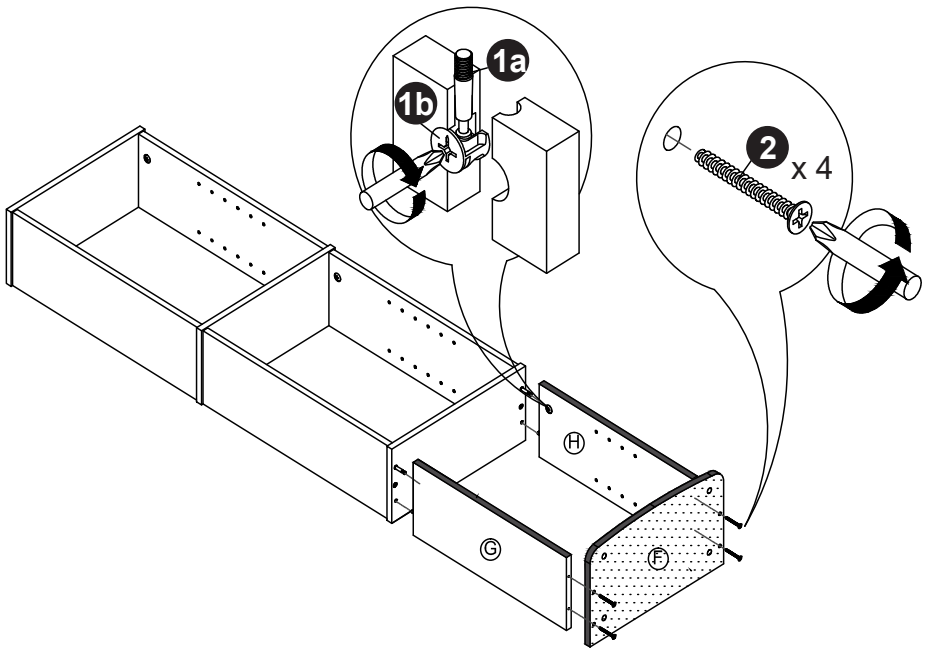

5

