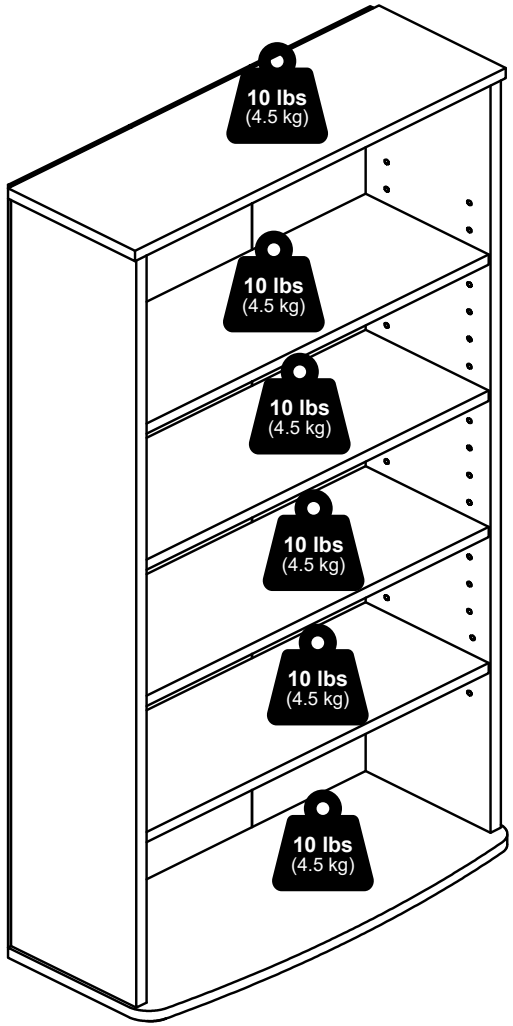

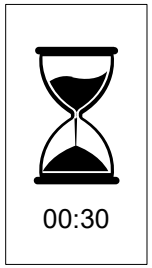



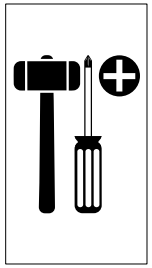

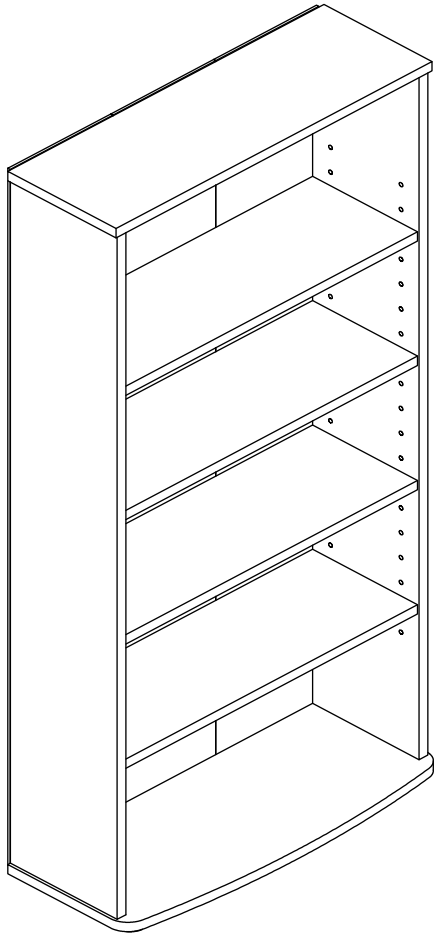

MODEL: 17058

1705820250523

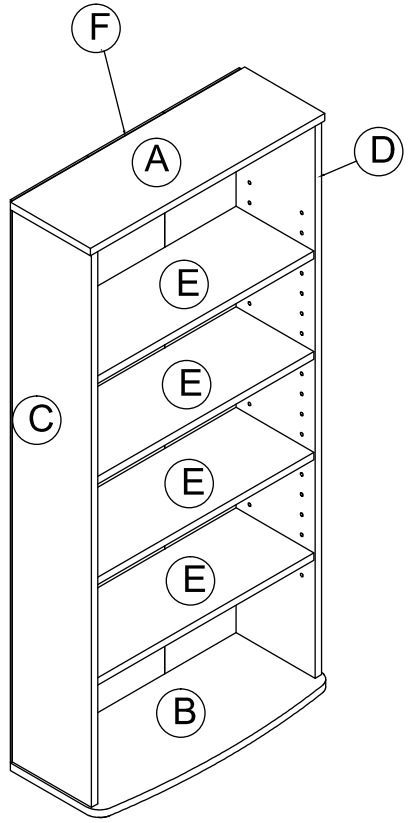

1 x 2 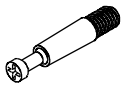 M6 x 31mm	2 x 2  15mm	3 x 4  M4 x 32mm	4 x 2 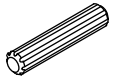 M6 x 20mm
5 x 16  5 x 6 x 16mm	6 x 5  Ø40 x 14mm	7 x 22 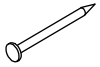 2.5 x 18mm	8 x 1 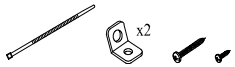

9 x 1 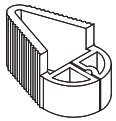

7

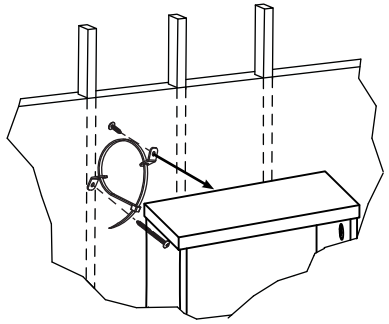

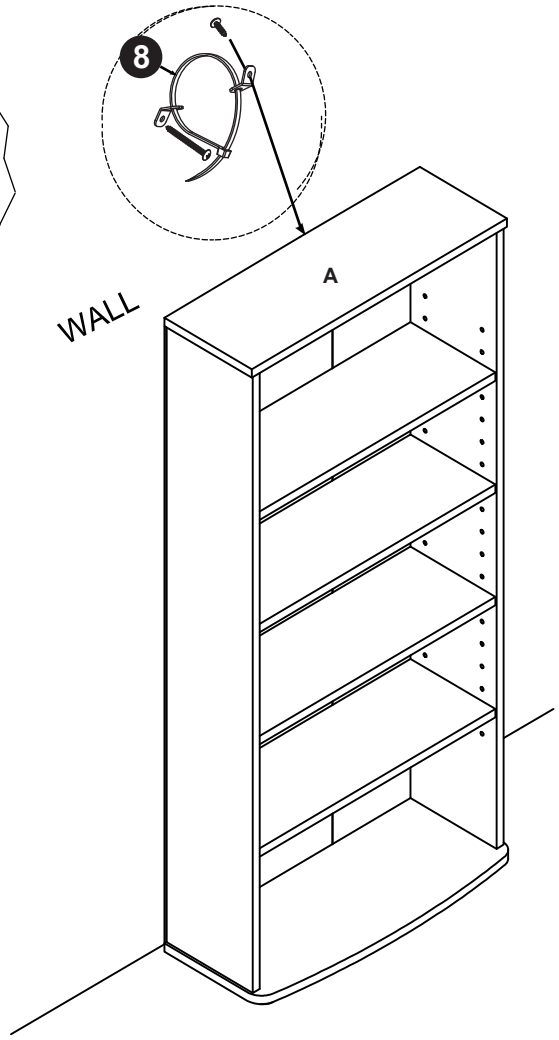

5

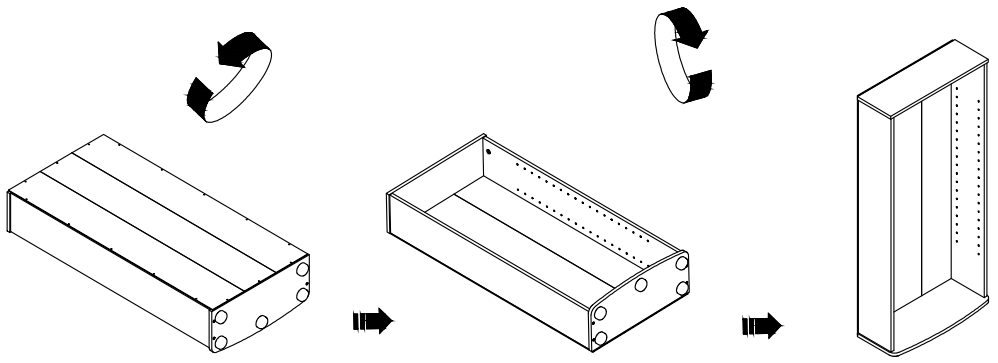

6

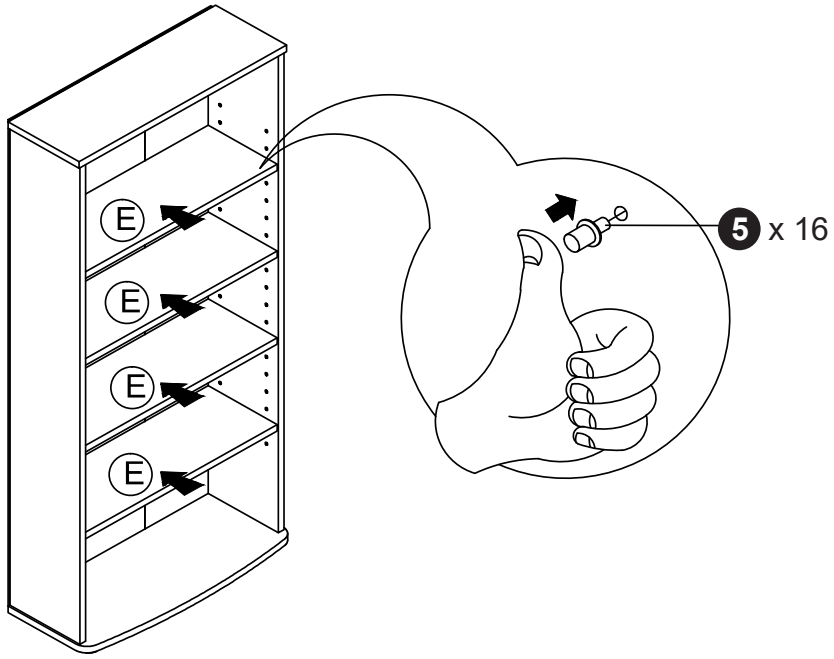

1

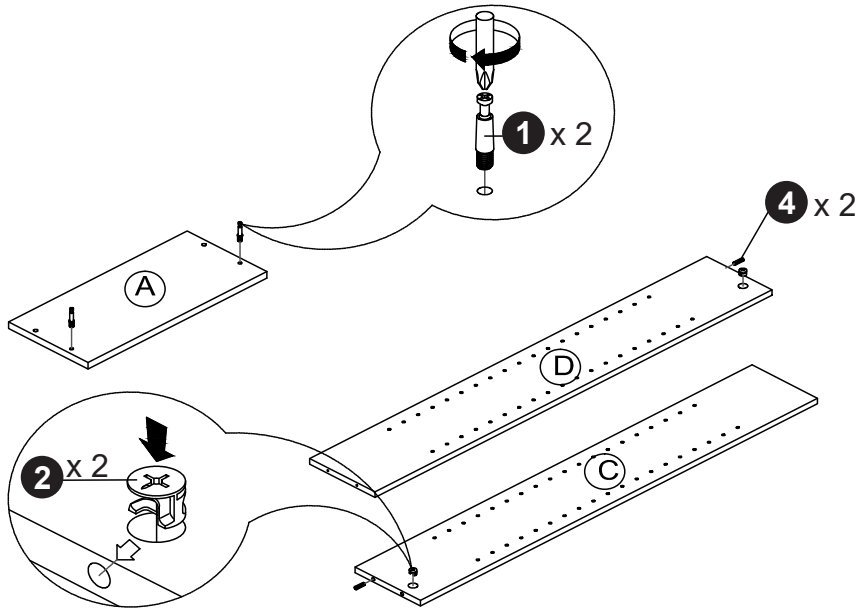

2

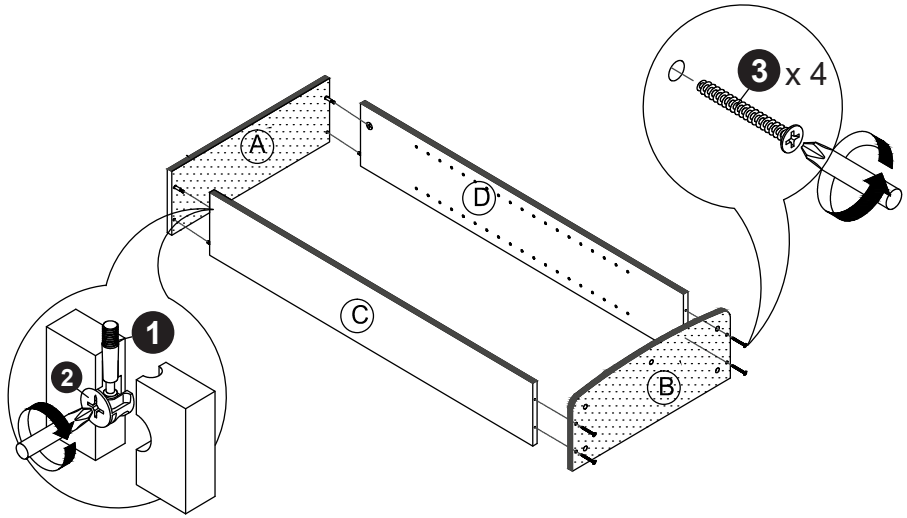

3

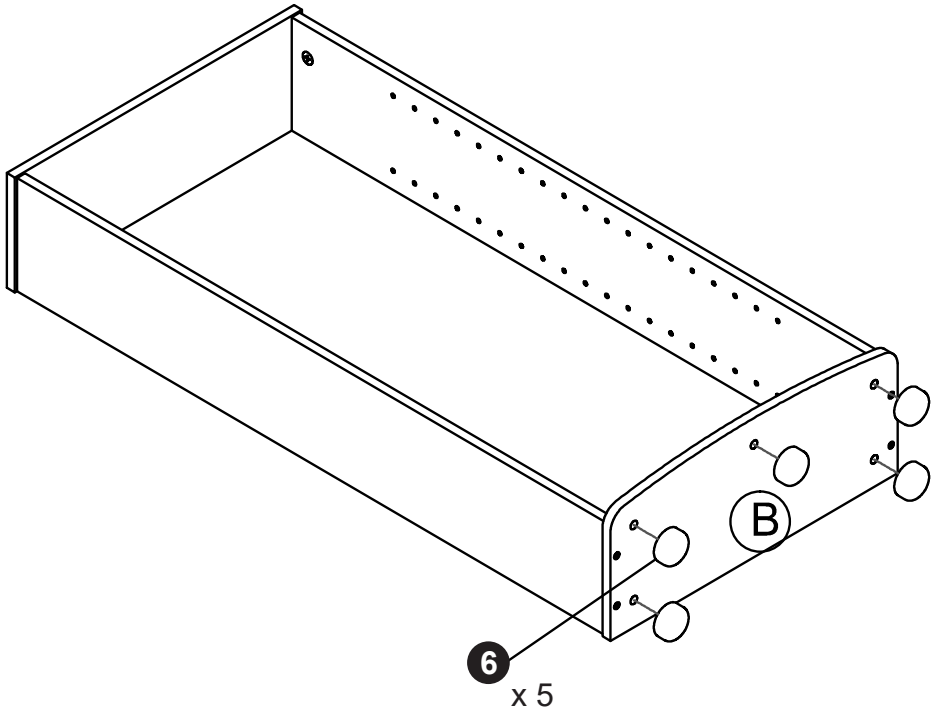

4

