STEP 3

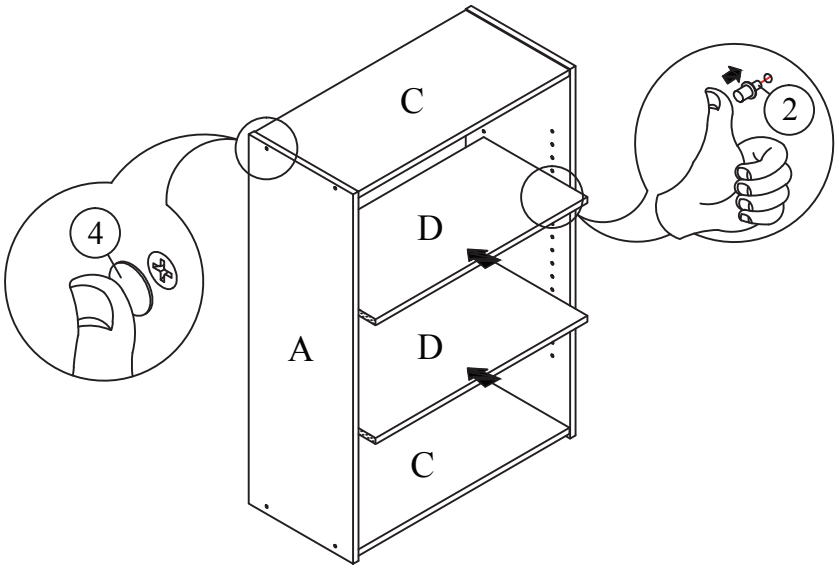

Recommended Maximum Weight

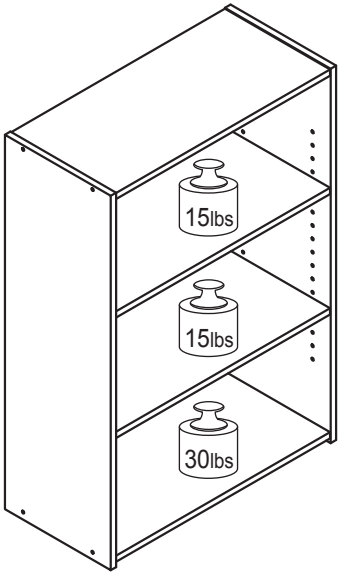

WARNING:

>This unit has been designed to support the maximum loads shown. Exceeding these load limits could cause sagging, instability, product collapse, and/or serious injury.

>DO NOT allow children to climb on unit.

>Put heavier items on lower shelves.

Furinno®
Fits Space. Fits Budget

Assembly Instruction

Furinno 3-Shelf Bookcase
MODEL : **17060**

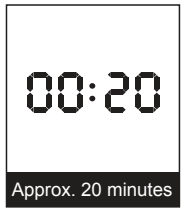

Approx. 20 minutes


Recomm. 1 Person


Tool Required

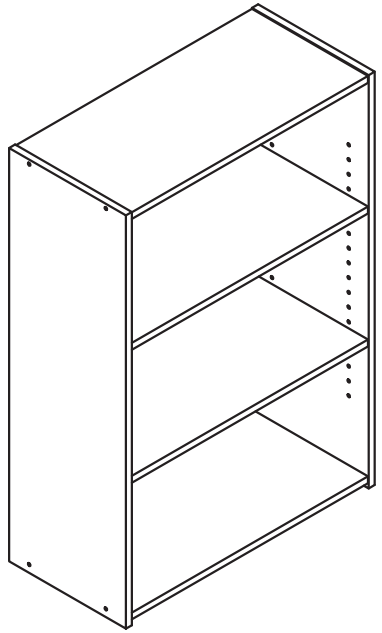

Customer Support

NEED HELP? For replacement requests or product inquiries, please contact our Customer Service Team by emailing us at **support@furinno.com**. Thank you for selecting Furinno!

www.furinno.com

1706020180911

NO	HARDWARE LIST	QTY
1	45MM C/B SCREW 	8 PCS
2	SHELF SUPPORT 	8 PCS
3	NAIL 	24 PCS
4	SCREW COVER CARD 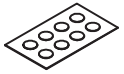	1 PC

NO	PARTS LIST	QTY
A	LEFT SIDE PANEL	1 PC
B	RIGHT SIDE PANEL	1 PC
C	FIXED SHELF PANEL	2 PCS
D	ADJUSTABLE SHELF PANEL	2 PCS
E	BACK PANEL	1 PC

USEFUL HINTS BEFORE YOU START:

1. Read each step carefully before starting.
2. It is important that each step is performed in correct order to avoid difficulties.
3. Identify, sort and count the parts before assembly.
4. Assemble your furniture on packaging cardboard to prevent scratch or damage.
5. Clean the product with mild cleanser using soft damped cloth. Do not use harsh or abrasive cleanser.
6. Using uncompatible hardware might cause damage to product.

ASSEMBLY INSTRUCTIONS

STEP 1

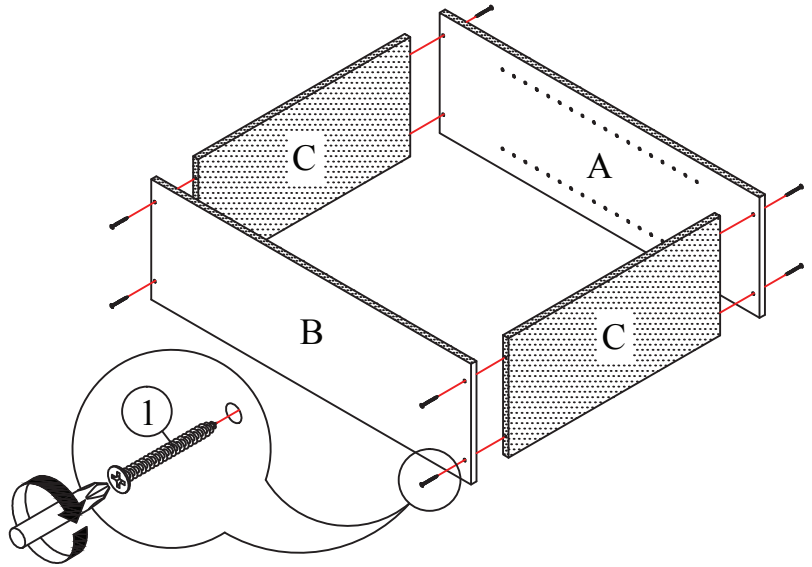

STEP 2

