STEP 5

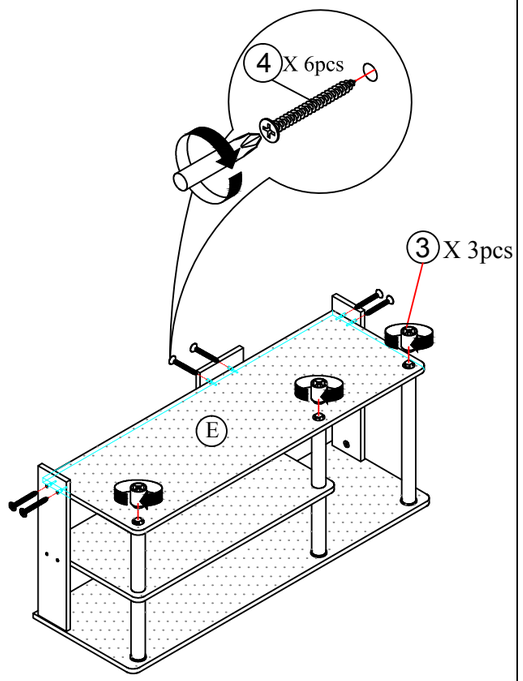

STEP 6

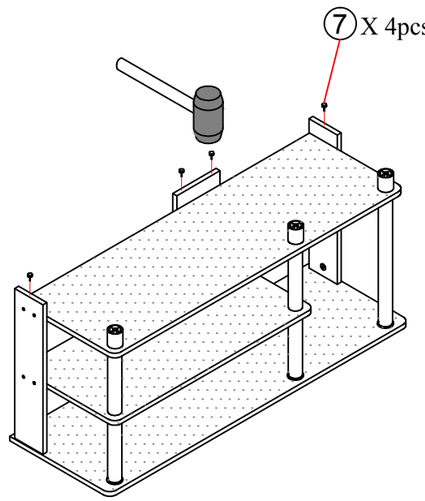

STEP 7

TURN 180°

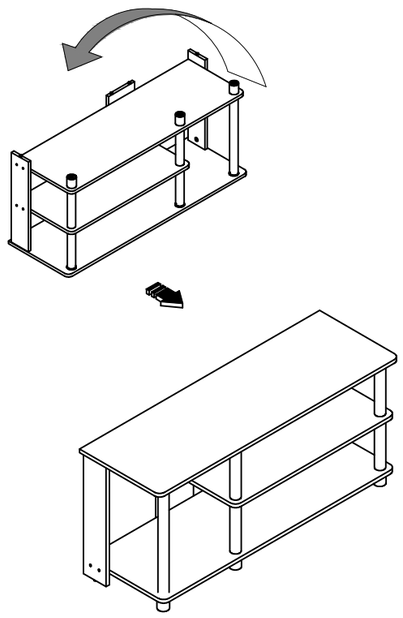

Recommended Maximum Weight

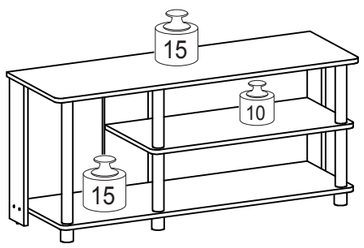

*Unit in Pound(lbs)

WARNING:

>This unit has been designed to support the maximum loads shown. Exceeding these load limits could cause sagging, instability, product collapse, and/or serious injury.

>DO NOT allow children to climb on unit.

>Put heavier items on lower shelves.

Furinno®
Fits Space. Fits Budget

00:15
Approx. 15 minutes

Recomm. 2 Person

Tool Required

Assembly Instruction

Furinno Compact Multi Storage Shoe Rack
MODEL : **17083**

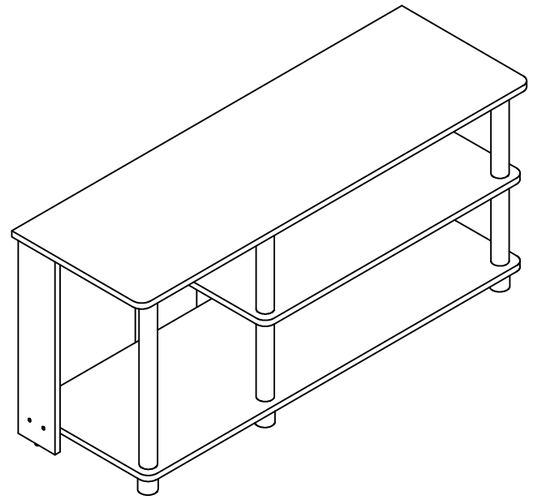

Customer Support

NEED HELP? For replacement requests or product inquiries, please contact our Customer Service Team by emailing us at **support@furinno.com**. Thank you for selecting Furinno!

www.furinno.com

HARDWARE & PARTS LIST

NO	HARDWARE LIST	QTY
1	LONG POLE	1pc
2	SHORT POLE	4pcs
3	ROUND LEG	3pcs
4	SCREW	10pcs
5	CAM-LOCK SCREW	4pcs
6	CAM-LOCK NUT	4pcs
7	NAIL LEG	4pcs

NO	PARTS LIST	QTY
A	TOP PANEL	1pc
B	LEFT SIDE PANEL	1pc
C	RIGHT SIDE PANEL	1pc
D	SMALL SHELF PANEL	1pc
E	LARGE SHELF PANEL	1pc
F	BACK PANEL	1pc

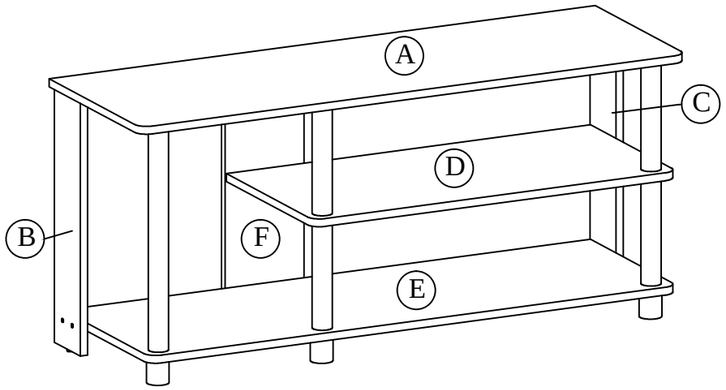

USEFUL HINTS BEFORE YOU START:

1. Read each step carefully before starting.
2. It is important that each step is performed in correct order to avoid difficulties.
3. Identify, sort and count the parts before assembly.
4. Assemble your furniture on packaging cardboard to prevent scratch or damage.
5. Clean the product with mild cleanser using soft damped cloth. Do not use harsh or abrasive cleanser.
6. Using uncompatible hardware might cause damage to product.

ASSEMBLY INSTRUCTIONS

BEFORE YOU BEGIN, PLEASE READ ASSEMBLY INSTRUCTION CAREFULY, FOLLOW THEM STEP BY STEP.

STEP 1

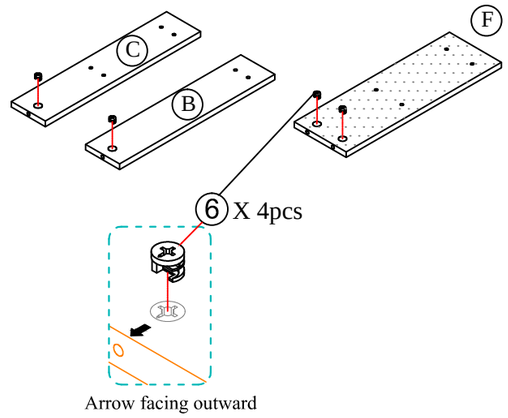

STEP 2

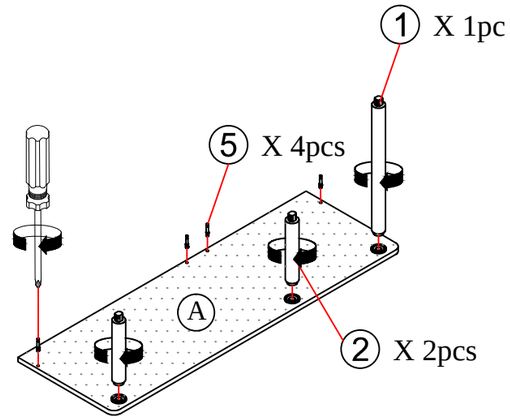

STEP 3

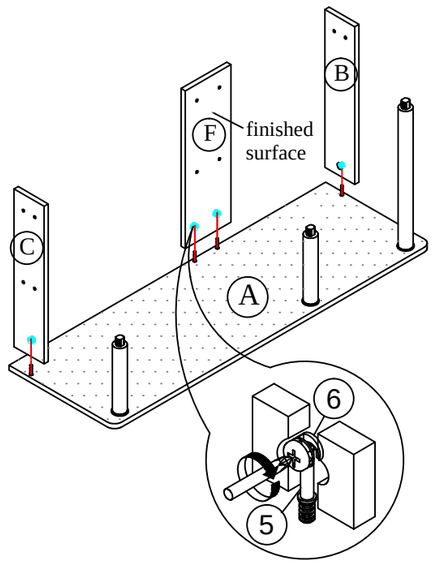

STEP 4

