STEP 2

Fix Top Cap (2) on top of the Shelf Panel (A), as shown.

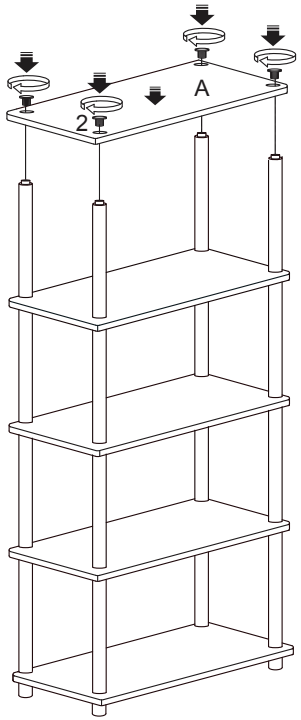

STEP 3

In order to prevent product tip over, please follow the instruction below to secure the unit to the wall.

HARDWARE PARTS LIST			QTY
WALL PLUG	EYELET SCREW	CABLE TIE	1 SET

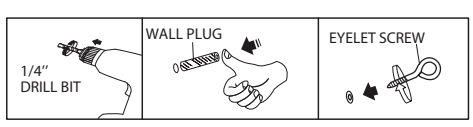

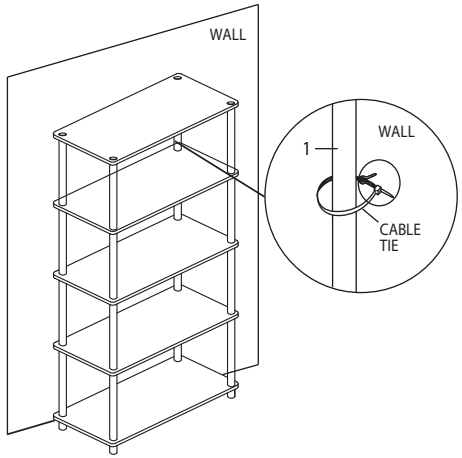

Recommended Maximum Weight

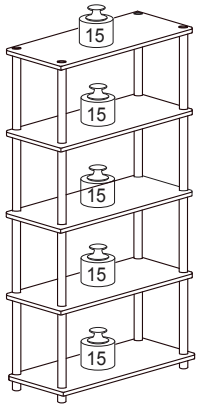

*Unit in Pound(lbs)

WARNING:

>This unit has been designed to support the maximum loads shown. Exceeding these load limits could cause sagging, instability, product collapse, and/or serious injury.

>DO NOT allow children to climb on unit.

>Put heavier items on lower shelves.

Furinno®
Fits Space. Fits Budget

Assembly Instruction

Furinno Turn-N-Tube 5-Tier Multipurpose Shelf Display Rack

MODEL : **17091**

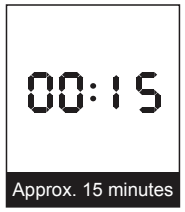





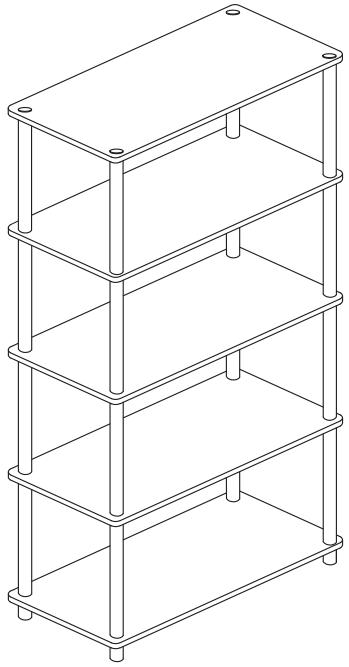

Customer Support

NEED HELP? For replacement requests or product inquiries, please contact our Customer Service Team by emailing us at **support@furinno.com**. Thank you for selecting Furinno!

www.furinno.com

1709120180326

No	Hardware List	Qty
1	Long Pole	16pcs
2	Top Cap	4pcs
3	Round Leg	4pcs

No	Parts List	Qty
A	Shelf Panel	5pcs

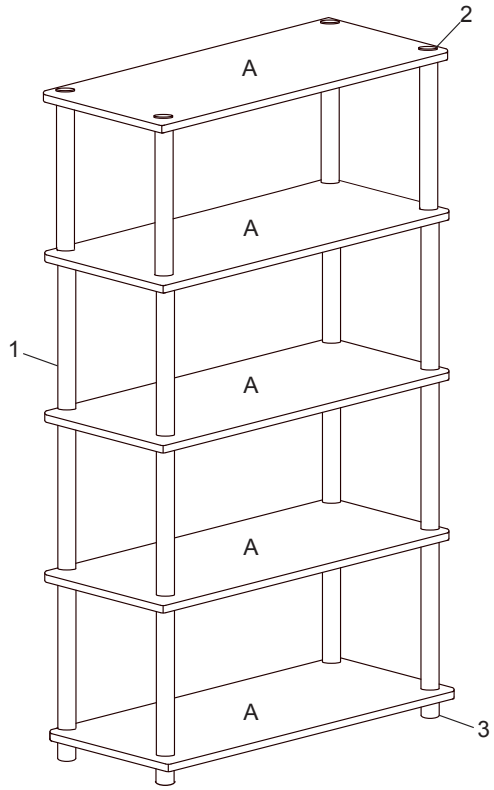

USEFUL HINTS BEFORE YOU START:

1. Read each step carefully before starting.
2. It is important that each step is performed in correct order to avoid difficulties.
3. Identify, sort and count the parts before assembly.
4. Assemble your furniture on packaging cardboard to prevent scratch or damage.
5. Clean the product with mild cleanser using soft damped cloth. Do not use harsh or abrasive cleanser.
6. Using uncompatible hardware might cause damage to product.

STEP 1

1.1 Attach Round Leg (3) to the bottom of Shelf Panel (A) and tighten to Long Pole (1) .
1.2 Attach another Shelf Panel (A) and repeat the steps, as shown.

STEP 1.4

STEP 1.3

STEP 1.2

STEP 1.1

