STEP 3

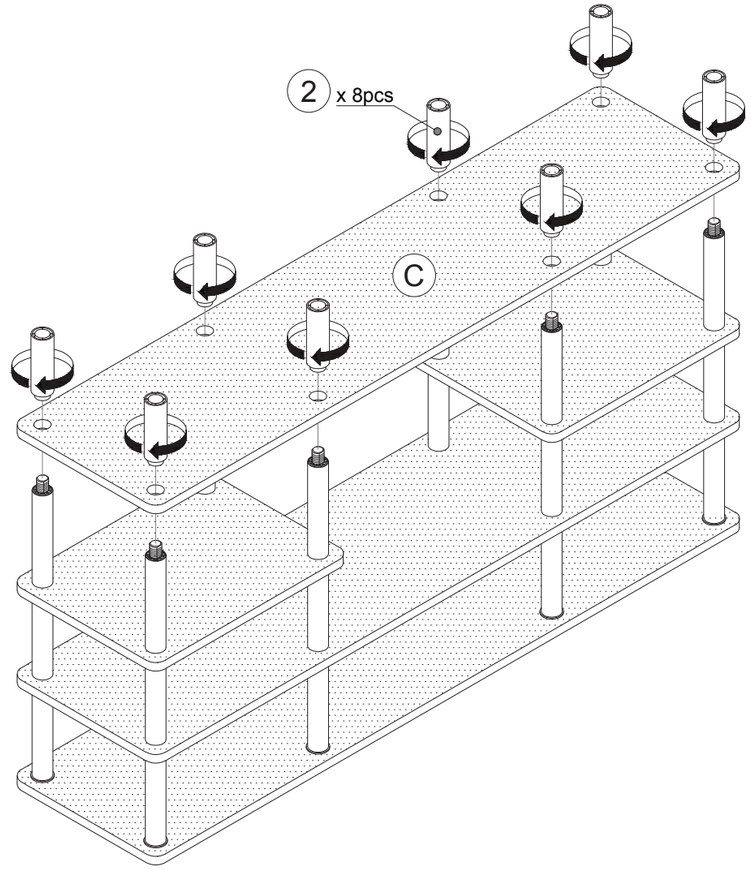

Recommended Maximum Weight

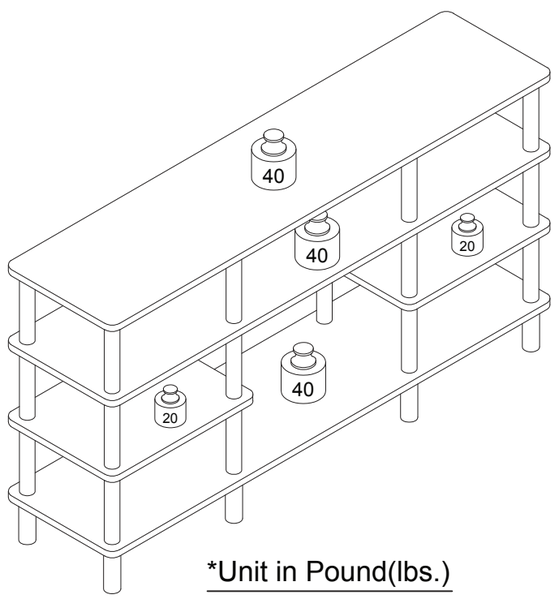

*Unit in Pound(lbs.)

WARNING:

>This unit has been designed to support the maximum loads shown. Exceeding these load limits could cause sagging, instability, product collapse, and/or serious injury.

>DO NOT allow children to climb on unit.

> Put heavier items on lower shelves.

Furinno®
Fits Space. Fits Budget

Assembly Instruction

Furinno 4 Tier Multipurpose Wide Shelf

MODEL : **18074**



Approx. 20 minutes



Recomm. 1 Person

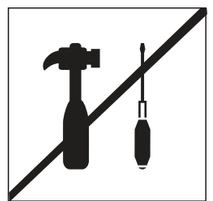

No Tools Required

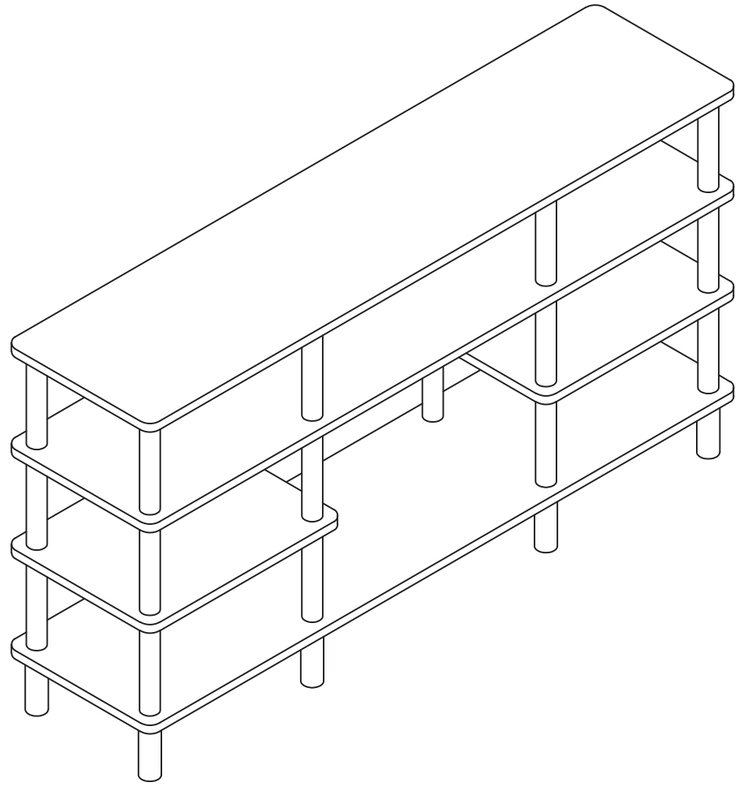

Customer Support

NEED HELP? For replacement requests or product inquiries, please contact our Customer Service Team by emailing us at **support@furinno.com**. Thank you for selecting Furinno!

www.furinno.com

1807420181216

HARDWARE & PARTS LIST

NO	PARTS LIST	QTY
A	TOP PANEL	1 PC
B	SMALL SHELF PANEL	2 PCS
C	LARGE SHELF PANEL	2 PCS

NO	HARDWARE LIST	QTY
1	SHORT PE TUBE	24 PCS
2	PE LEG	8 PCS

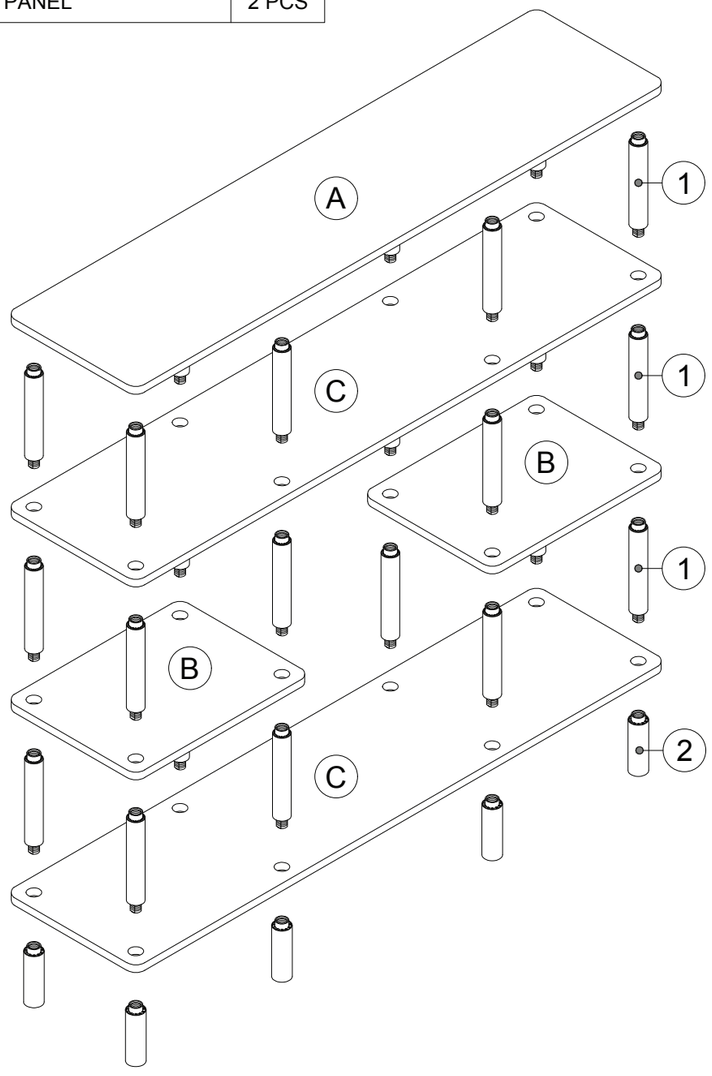

USEFUL HINTS BEFORE YOU START:

1. Read each step carefully before starting.
2. It is important that each step is performed in correct order to avoid difficulties.
3. Identify, soft and count the parts before assembly.
4. Assemble your furniture on packaging cardboard to prevent scratch or damage.
5. Clean the product with mild cleanser using soft damped cloth. Do not use harsh or abrasive cleanser.
6. Using uncompatible hardware might cause damage to product.

STEP 1

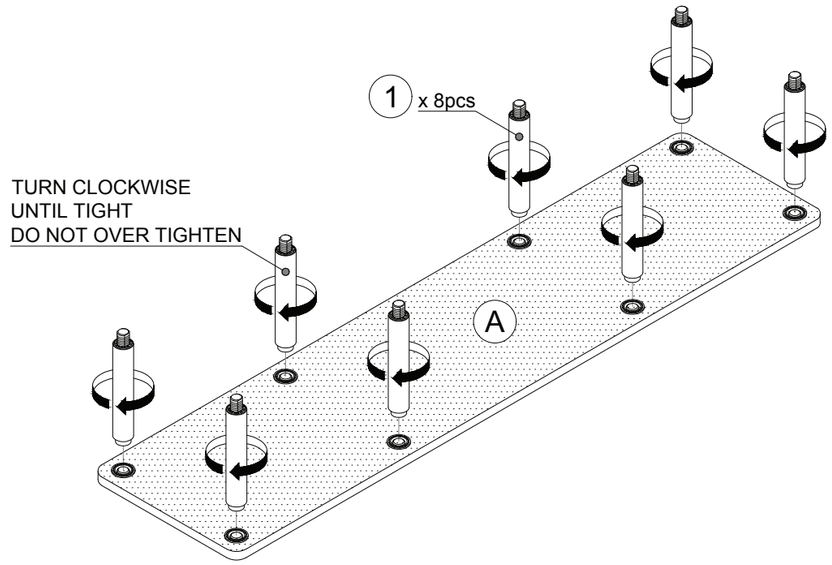

STEP 2

