Furinno®
Fits Space. Fits Budget

Assembly Instruction

Furinno TV Stand

MODEL : **18108**

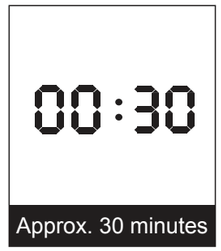

Approx. 30 minutes



Recomm. 2 Persons

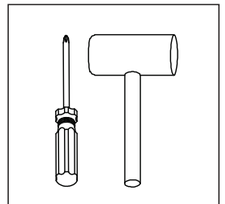

Tools Required

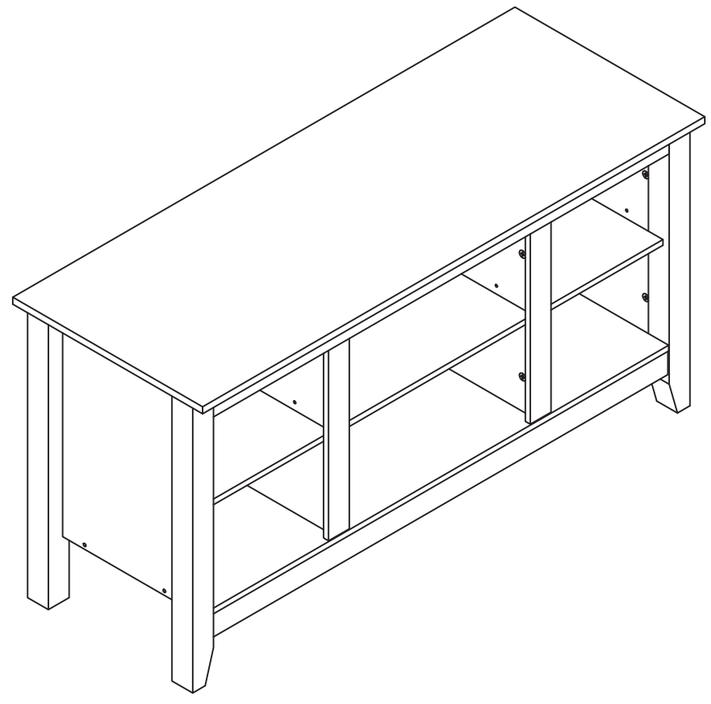

Customer Support

NEED HELP? For replacement requests or product inquiries, please contact our Customer Service Team by emailing us at **support@furinno.com**. Thank you for selecting Furinno!

www.furinno.com

1810820191004

HARDWARE & PARTS LIST

NO	PARTS LIST	QTY
A	TOP PANEL	1 PC
B	BOTTOM PANEL	1 PC
C	SIDE PANEL	2 PCS
D	CENTER LEFT PANEL	1 PC
E	CENTER RIGHT PANEL	1 PC
F	TOP BAR	1 PC
G	BOTTOM BAR	1 PC
H	CENTER BAR	2 PCS
I	FRONT LEFT LEG	1 PC
J	FRONT RIGHT LEG	1 PC
K	BACK LEFT LEG	1 PC
L	BACK RIGHT LEG	1 PC
M	SIDE SHELF PANEL	2 PCS
N	CENTER SHELF PANEL	1 PC
O	LEG SUPPORT	2 PCS
P	SIDE BACK PANEL	2 PCS
Q	CENTER BACK PANEL	1 PC

NO	HARDWARE LIST	QTY
1	CAM SCREW	28 PCS
2	CAM LOCK - 12MM	24 PCS
3	CAM LOCK - 9MM	4 PCS
4	38MM SCREW	12 PCS
5	WOODEN DOWEL	12 PCS
6	NAIL LEG	8 PCS
7	SHELF SUPPORT	12 PCS
8	STICKER	4 PCS

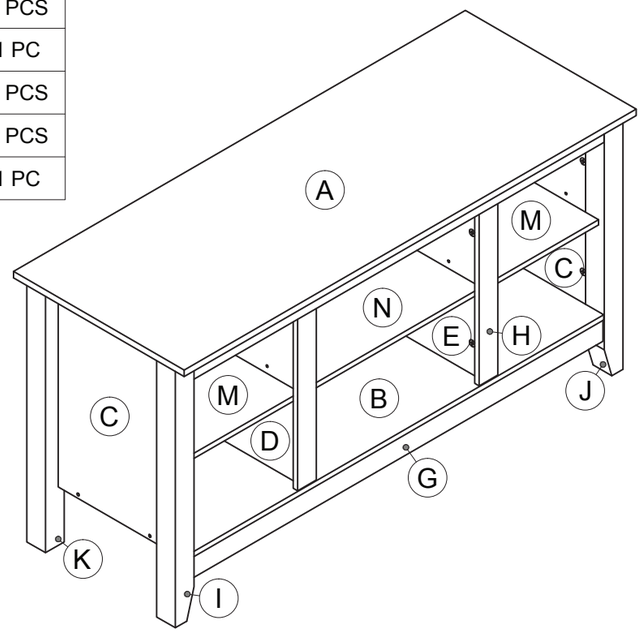

USEFUL HINTS BEFORE YOU START:

1. Read each step carefully before starting.
2. It is important that each step is performed in correct order to avoid difficulties.
3. Identify, soft and count the parts before assembly.
4. Assemble your furniture on packaging cardboard to prevent scratch or damage.
5. Clean the product with mild cleanser using soft damped cloth. Do not use harsh or abrasive cleanser.
6. Using uncompatible hardware might cause damage to product.

STEP 15

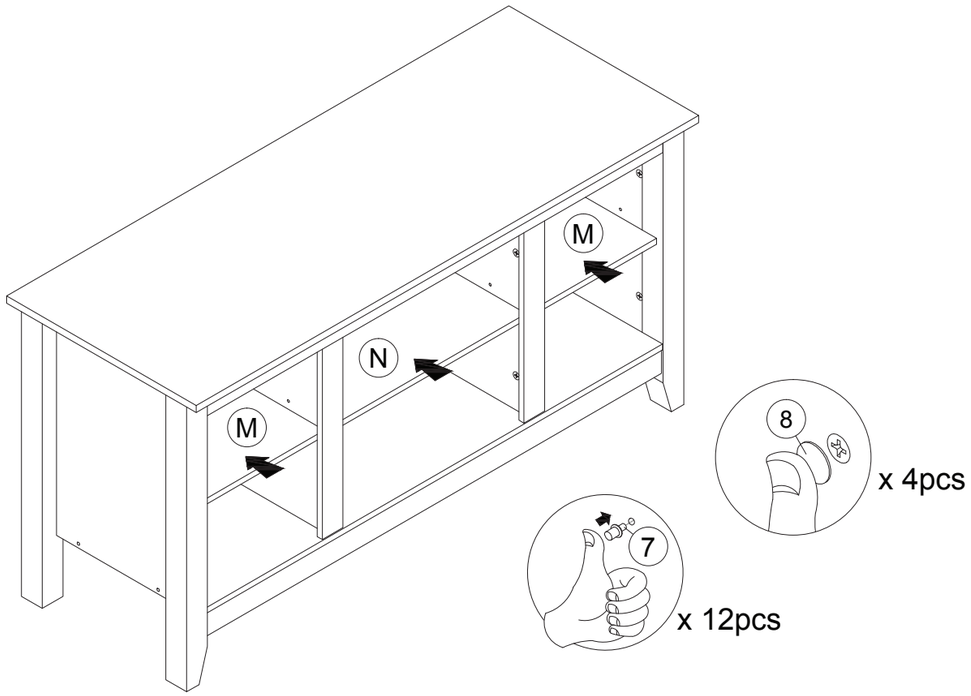

Recommended Maximum Weight

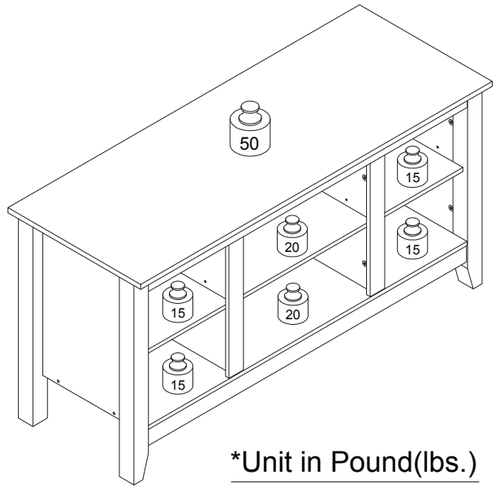

*Unit in Pound(lbs.)

>This unit has been designed to support the maximum loads shown. Exceeding these load limits could cause sagging, instability, product collapse, and/or serious injury.

>DO NOT allow children to climb on unit.

> Put heavier items on lower shelves.

STEP 1

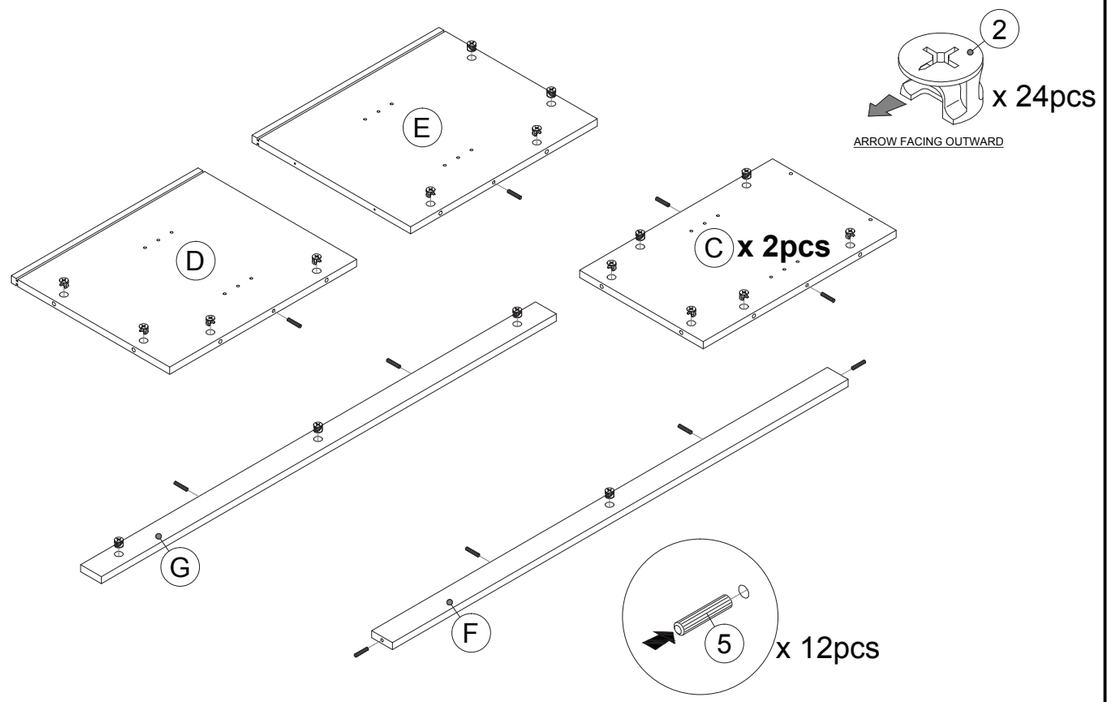

STEP 2

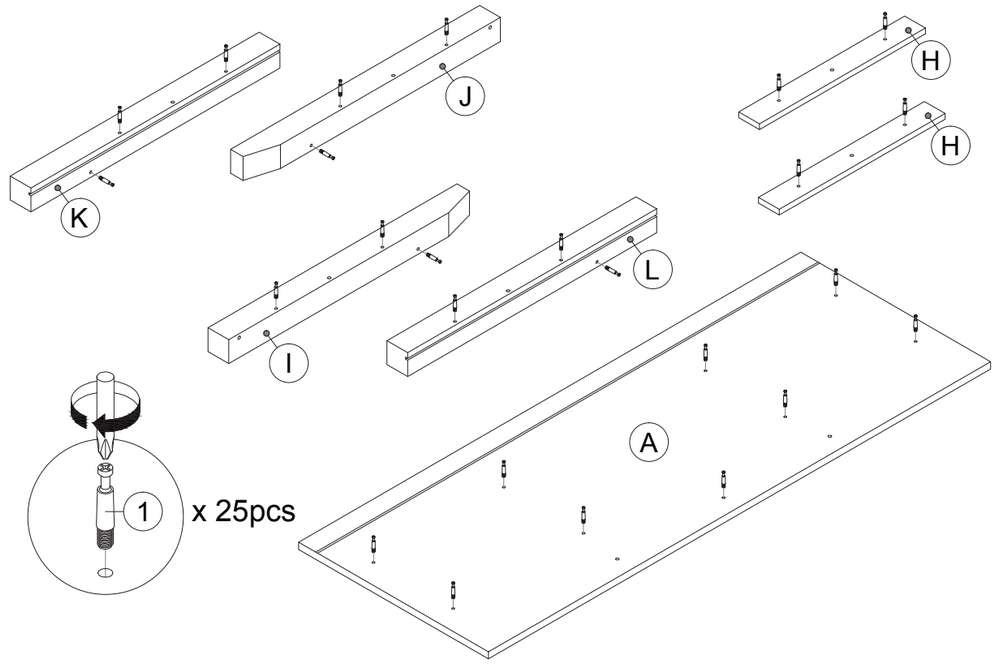

STEP 3

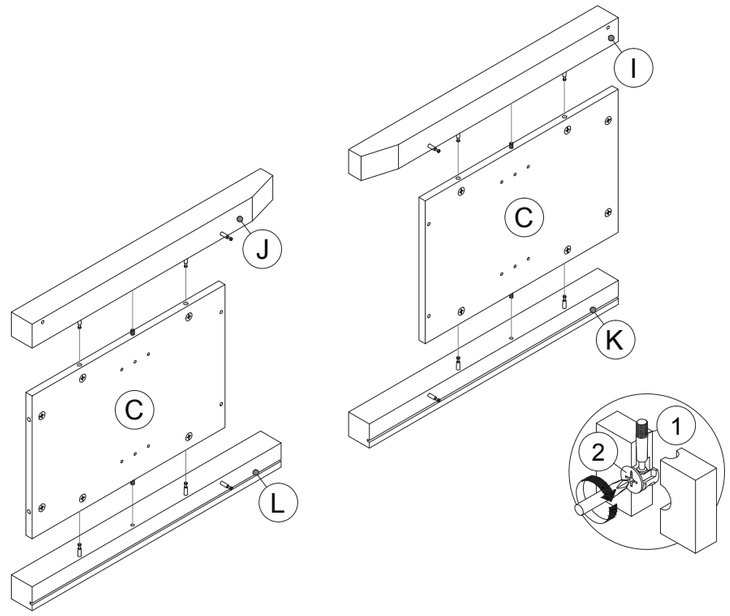

STEP 4

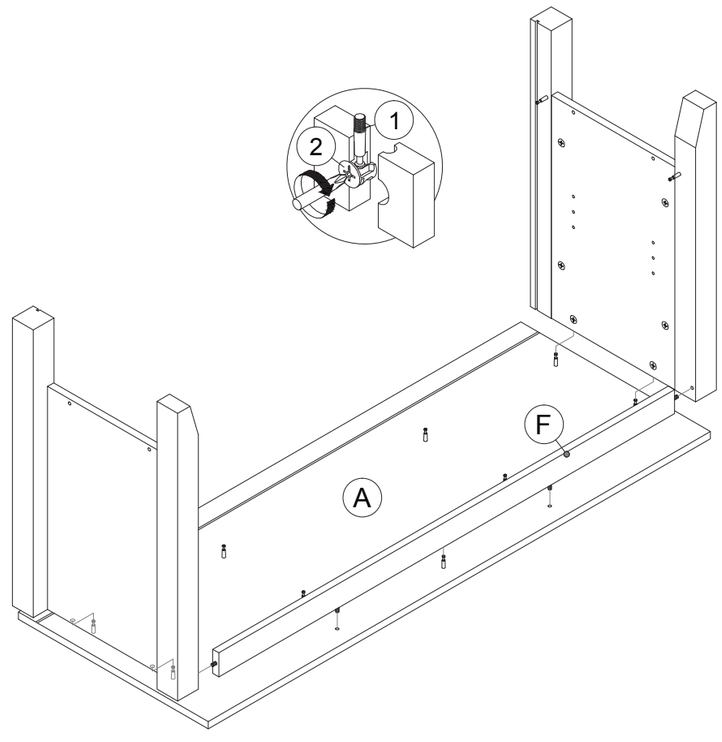

STEP 13

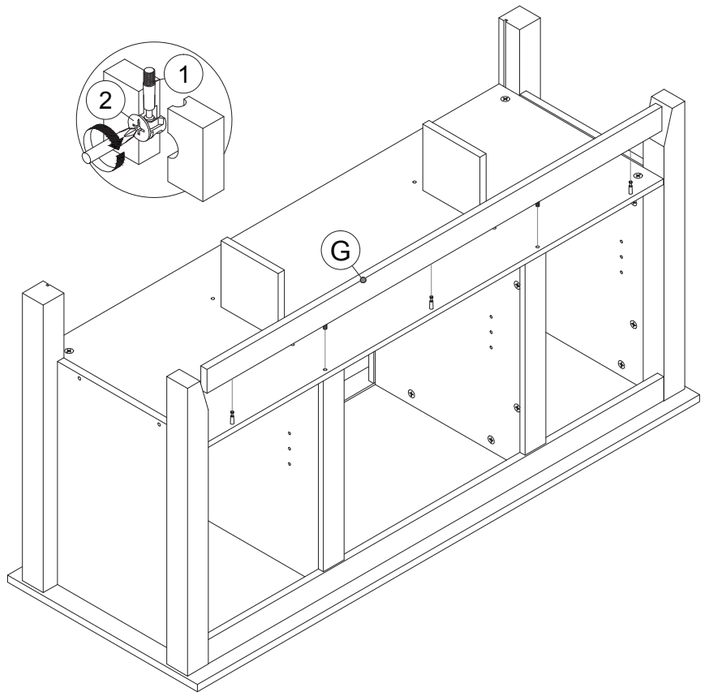

STEP 14

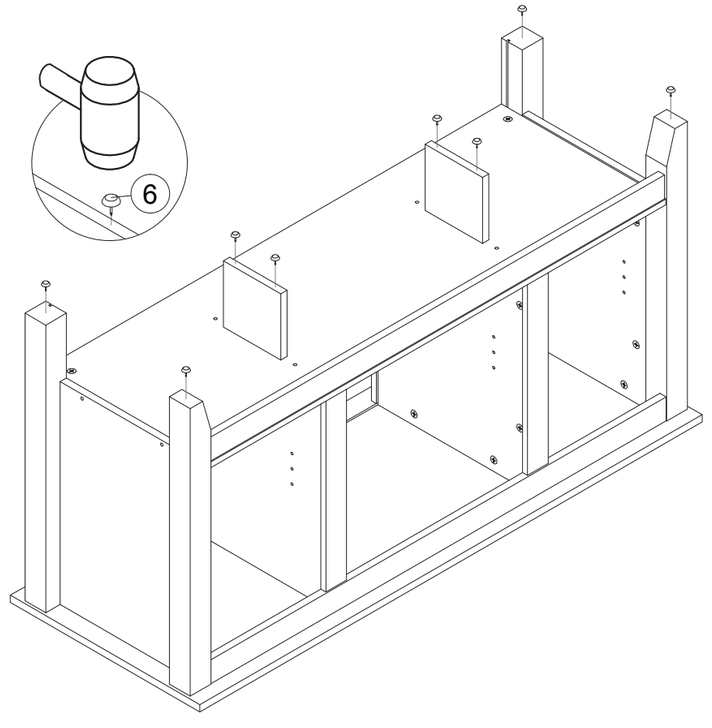

STEP 11

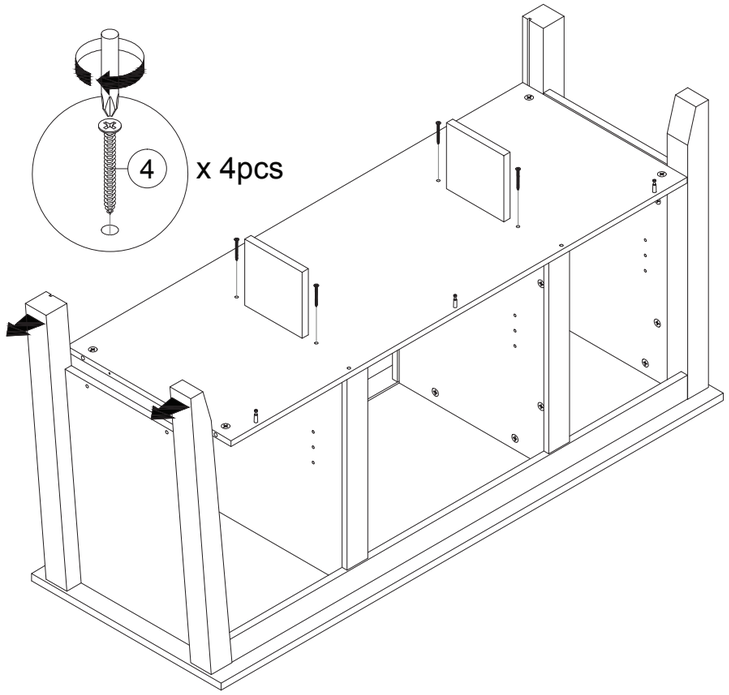

STEP 12

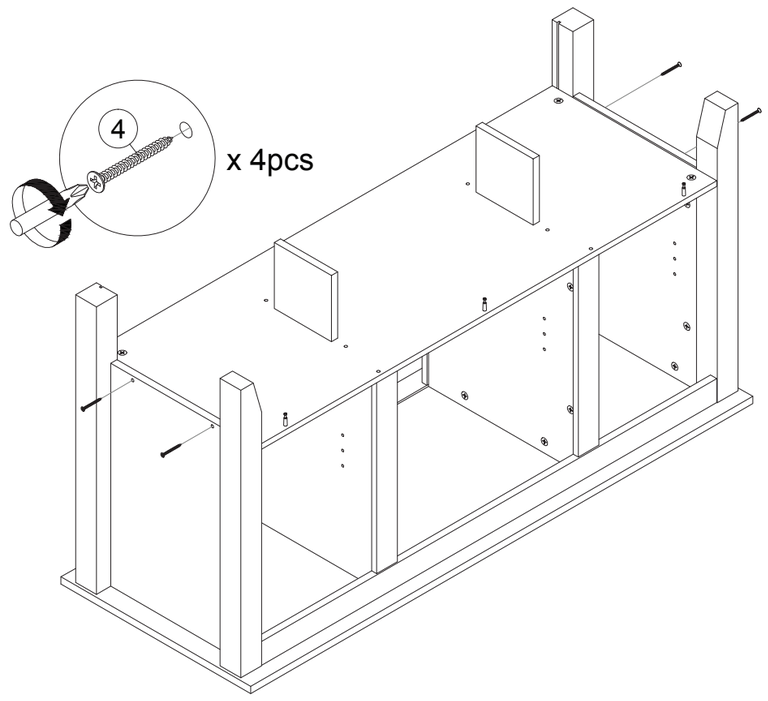

STEP 5

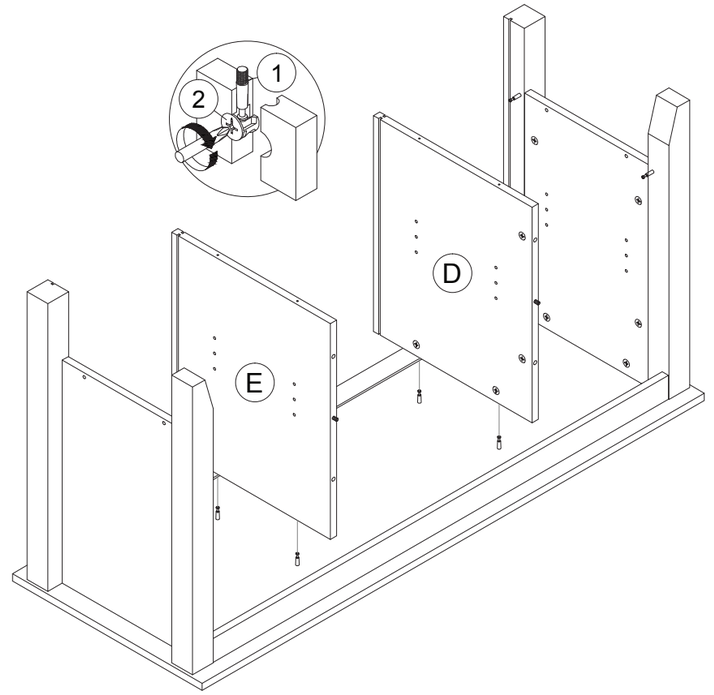

STEP 6

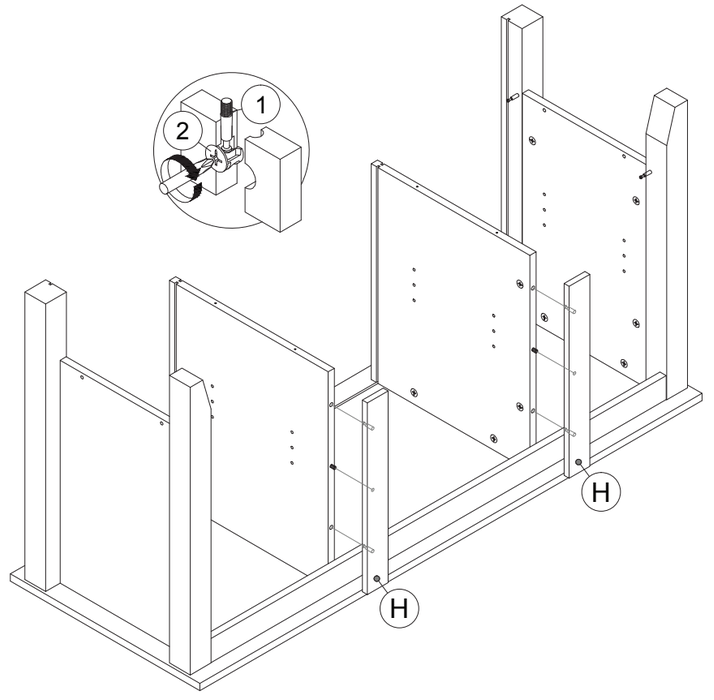

STEP 7

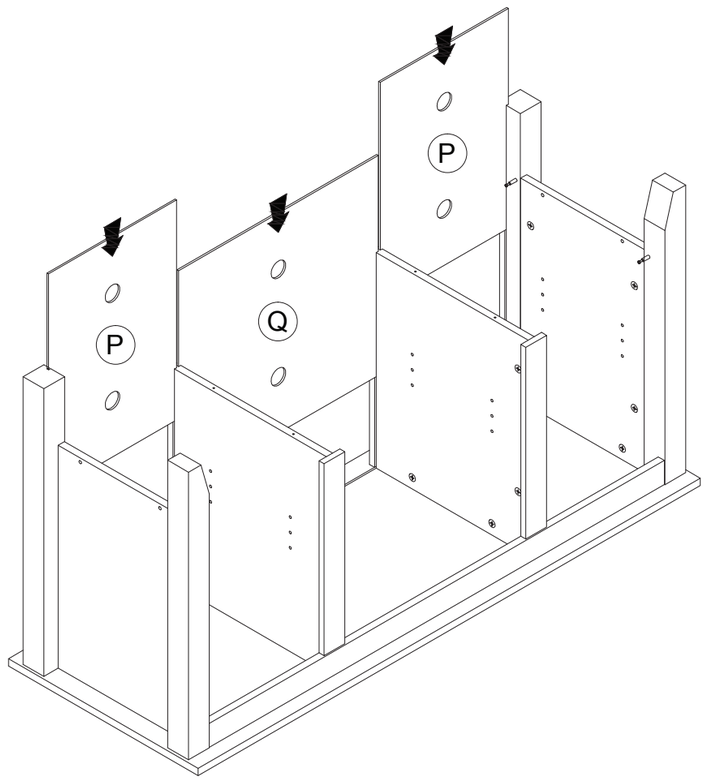

STEP 8

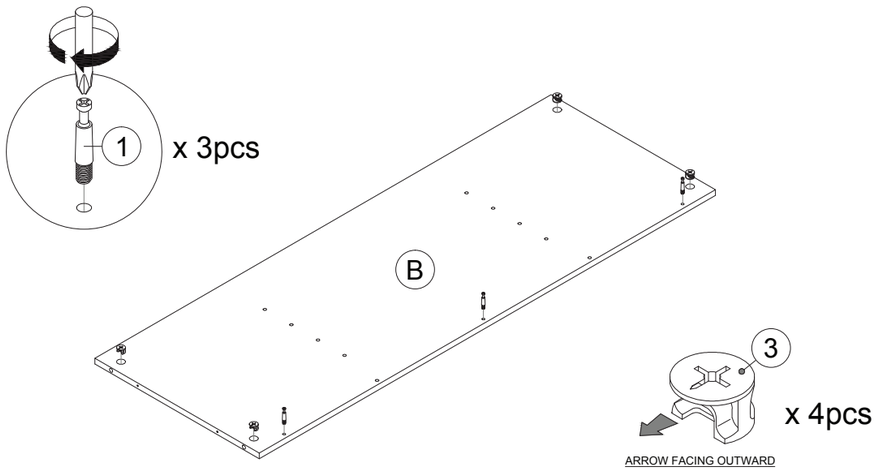

STEP 9

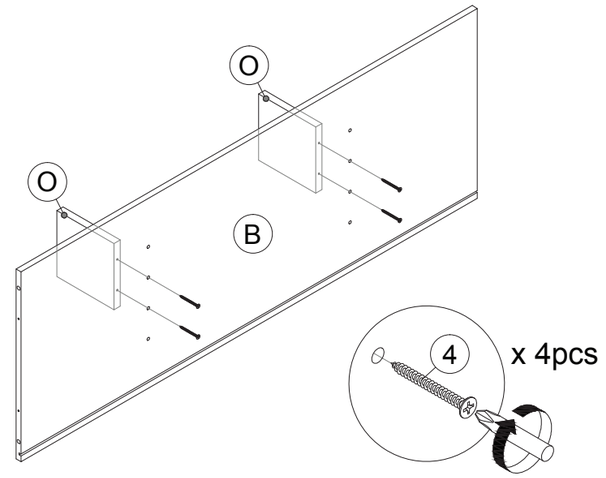

STEP 10

