STEP 4

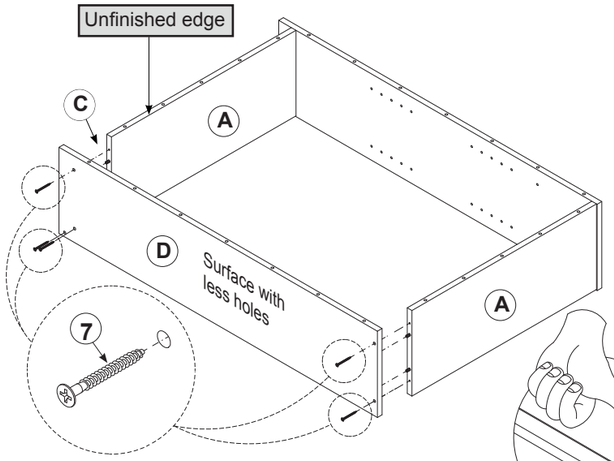

STEP 5

NOTE: Please do not remove this warning label.

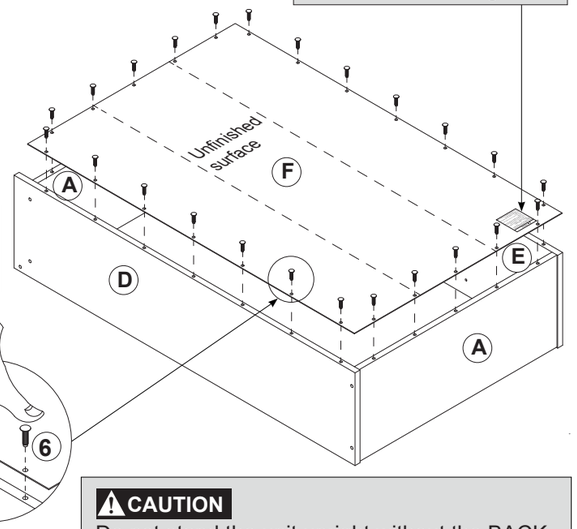

⚠ CAUTION
Do not stand the unit upright without the BACK fastened. The unit may collapse.

STEP 6

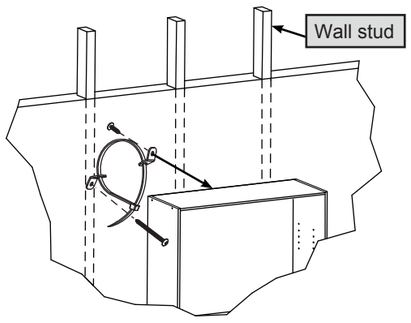

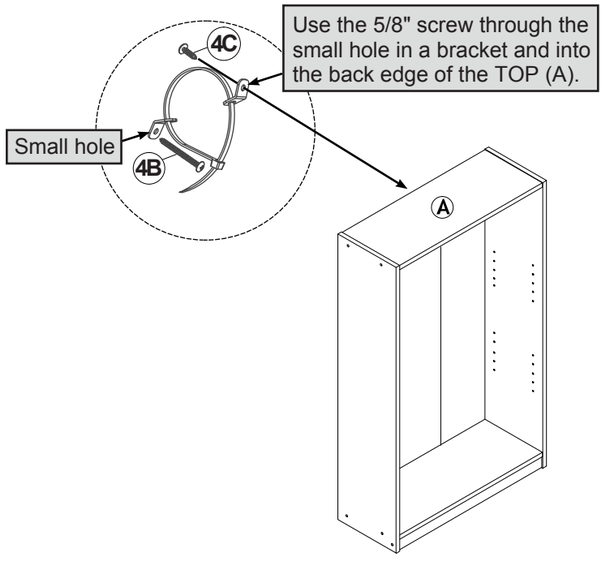

STEP 7

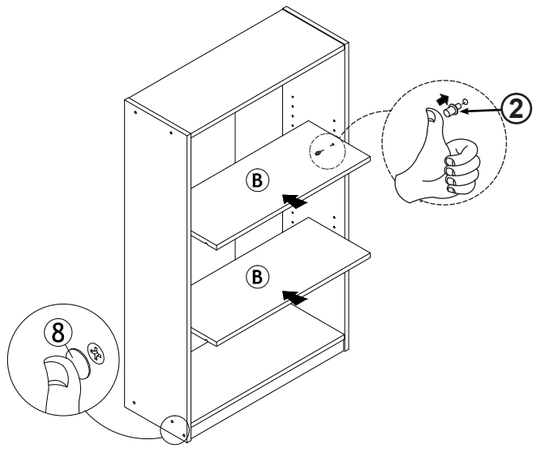

Recommended Maximum Weight

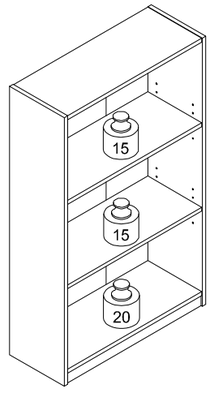

*Unit in Pound(lbs.)

Furinno®
Fits Space. Fits Budget

Assembly Instruction

Furinno 3-Tier Bookshelf

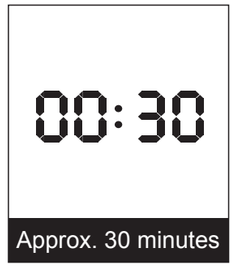





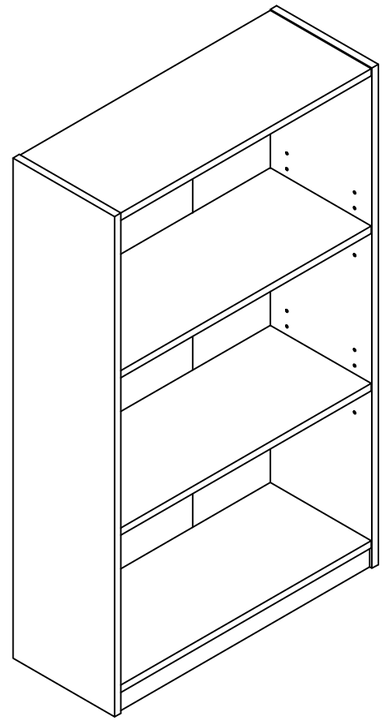

Customer Support

NEED HELP? For replacement requests or product inquiries, please contact our Customer Service Team by emailing us at **support@furinno.com**. Thank you for selecting Furinno!

www.furinno.com

1908120190923

HARDWARE & PARTS LIST

NO	HARDWARE LIST	QTY
1	SMALL SCREW	4 PCS
2	SHELF PIN	8 PCS
3	DOWEL	8 PCS
4	WALL MOUNT SET 4A x 1 PC 4B x 1 PC 4C x 1 PC 4D x 2 PCS	1 SET
5	ANGLE BRACKET	2 PCS
6	STOPPER	24 PCS
7	LARGE SCREW	10PCS
8	SCREW COVER CARD	2 PCS

NO	PARTS LIST	QTY
A	TOP & BOTTOM PANEL	2 PCS
B	ADJUSTABLE SHELF PANEL	2 PCS
C	SKIRT BAR	1PC
D	LEFT SIDE PANEL	1 PC
E	RIGHT SIDE PANEL	1 PC
F	BACK PANEL	1 PC

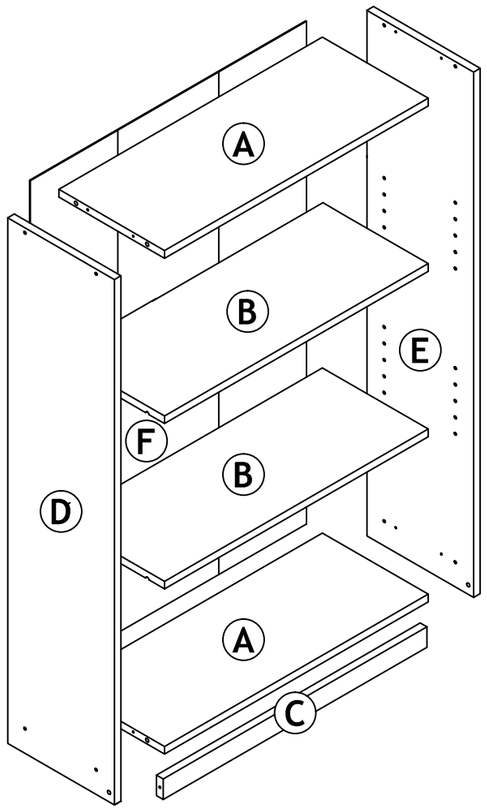

USEFUL HINTS BEFORE YOU START:

1. Read each step carefully before starting.
2. It is important that each step is performed in correct order to avoid difficulties.
3. Identify, sort and count the parts before assembly.
4. Assemble your furniture on packaging cardboard to prevent scratch or damage.
5. Clean the product with mild cleanser using soft damped cloth. Do not use harsh or abrasive cleanser.
6. Using uncompatible hardware might cause damage to product.

STEP 1

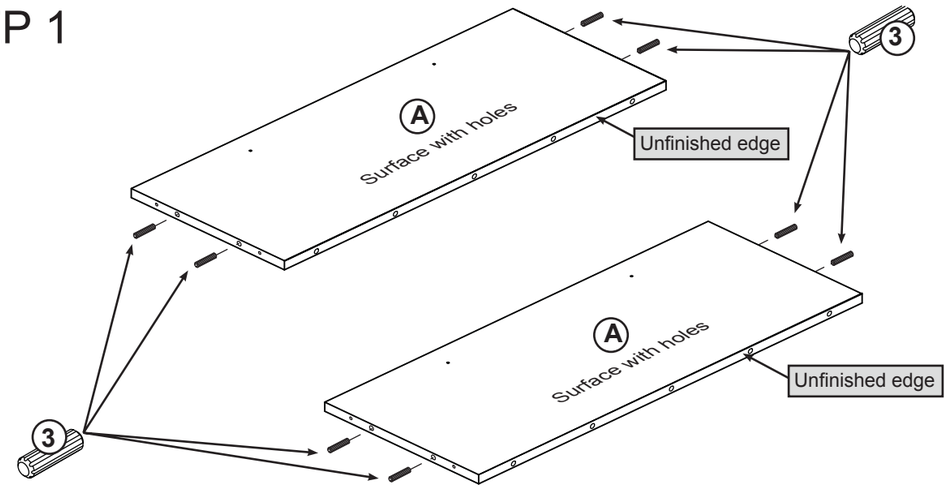

STEP 2

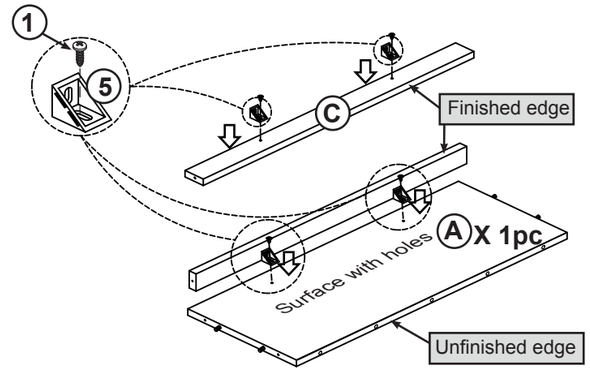

STEP 3

