# STEP 11

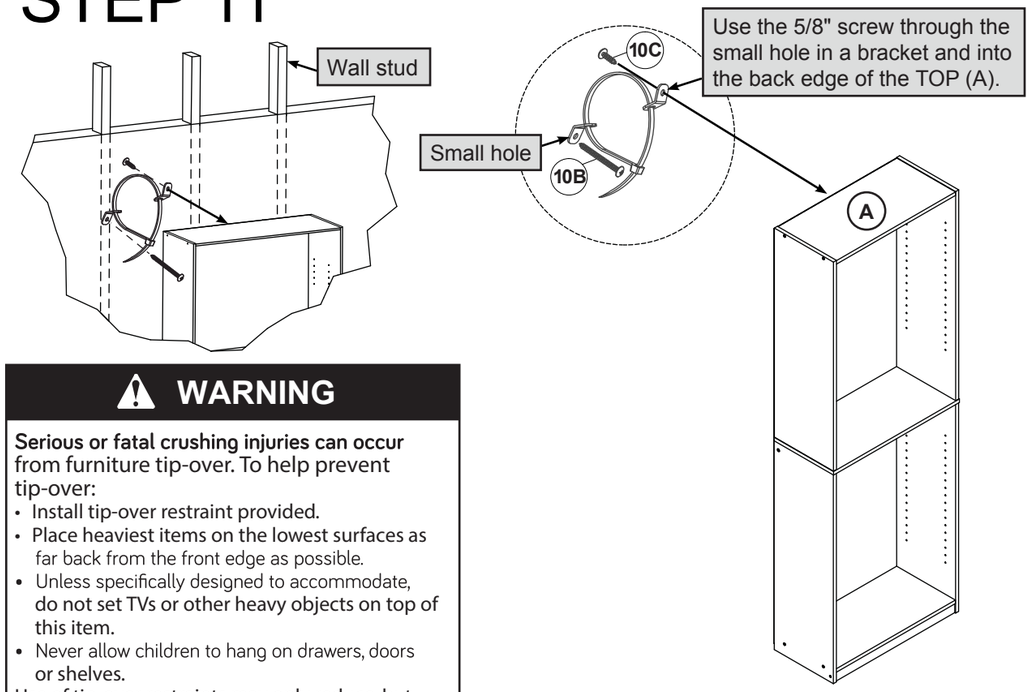


**⚠ WARNING**

**Serious or fatal crushing injuries can occur** from furniture tip-over. To help prevent tip-over:

- Install tip-over restraint provided.
- Place heaviest items on the lowest surfaces as far back from the front edge as possible.
- Unless specifically designed to accommodate, do not set TVs or other heavy objects on top of this item.
- Never allow children to hang on drawers, doors or shelves.

Use of tip-over restraints may only reduce, but not eliminate, the risk of tip-over.

*This is a permanent label. Do not attempt to remove!*

# STEP 12

Recommended Maximum Weight

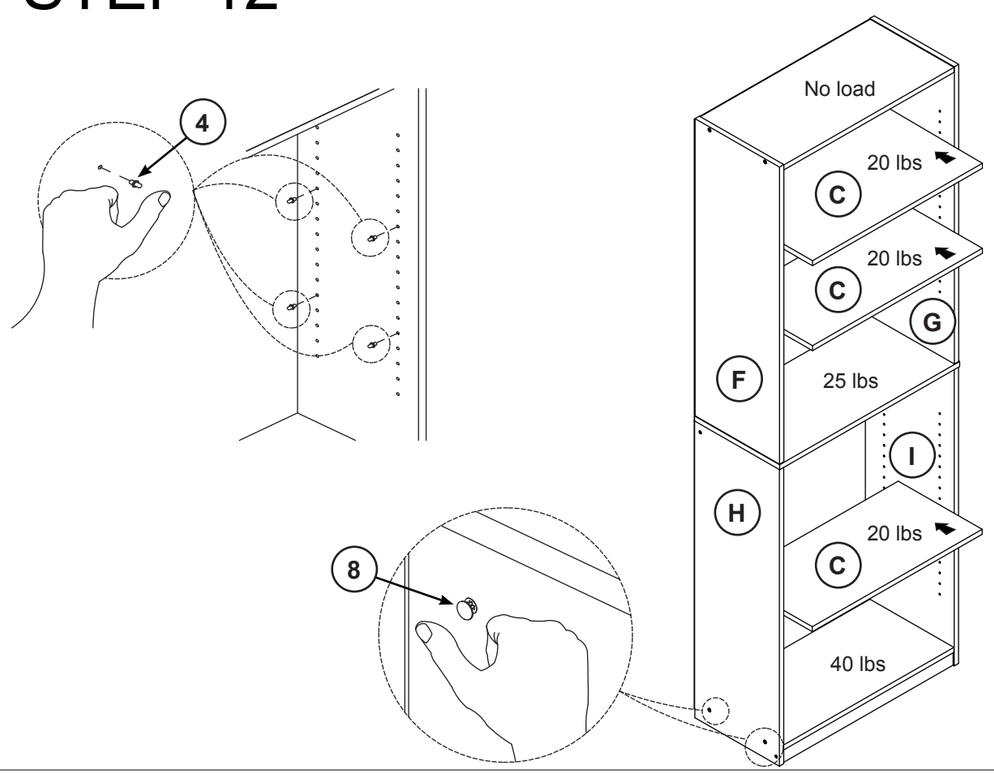




Furinno®

Fits Space. Fits Budget

# *Assembly Instruction*

Furinno 5-Tier Bookshelf

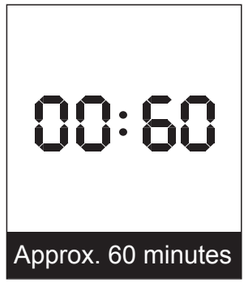


Approx. 60 minutes



Recomm. 2 Persons

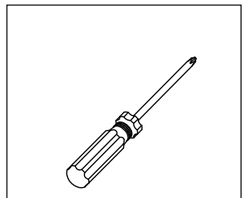

Tools Required

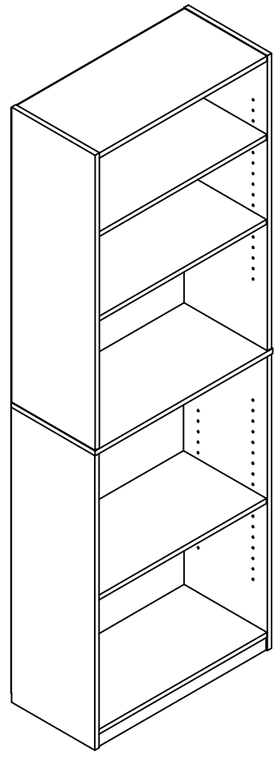

## *Customer Support*

**NEED HELP?** For replacement requests or product inquiries, please contact our Customer Service Team by emailing us at **support@furinno.com**. Thank you for selecting Furinno!

***www.furinno.com***



1908220190926

# HARDWARE & PARTS LIST

| NO | HARDWARE LIST | QTY |
|---|---|---|
| 1 | SMALL SCREW | 4 PCS |
| 2 | MINI FIX CAM | 4 PCS |
| 3 | MINI FIX BOLT | 4 PCS |
| 4 | SHELF PIN | 12 PCS |
| 5 | ANGLE BRACKET | 2 PCS |
| 6 | STOPPER | 43 PCS |
| 7 | LARGE SCREW | 16 PCS |
| 8 | SCREW COVER CARD | 2 PCS |
| 9 | DOWEL | 8 PCS |
| 10 | WALL MOUNT SET<br>10A x 1 PC<br>10B x 1 PC<br>10C x 1 PC<br>10D x 2 PCS | 1 SET |

| NO | PARTS LIST | QTY |
|---|---|---|
| A | TOP PANEL | 1 PC |
| B | BOTTOM PANEL | 1 PC |
| C | ADJUSTABLE SHELF | 3 PCS |
| D | SIKIT PANEL | 2 PCS |
| E | FIXED SHELF PANEL | 1 PC |
| F | UPPER LEFT END PANEL | 1 PC |
| G | UPPER RIGHT END PANEL | 1 PC |
| H | LOWER LEFT END PANEL | 1 PC |
| I | LOWER RIGHT END PANEL | 1 PC |
| J | LARGE BACK PANEL | 1 PC |
| K | SMALL BACK PANEL | 1 PC |

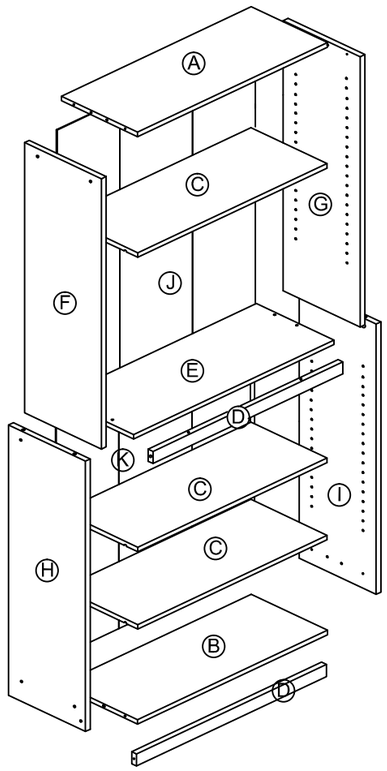


USEFUL HINTS BEFORE YOU START:

1. Read each step carefully before starting.
2. It is important that each step is performed in correct order to avoid difficulties.
3. Identify, sort and count the parts before assembly.
4. Assemble your furniture on packaging cardboard to prevent scratch or damage.
5. Clean the product with mild cleanser using soft damped cloth. Do not use harsh or abrasive cleanser.
6. Using uncompatible hardware might cause damage to product.



# STEP 9

**CAUTION**

Risk of damage or injury. Mini Fix Cams must be completely tightened. Mini Fix Cams that are not completely tightened may loosen, and parts may separate. To completely tighten:

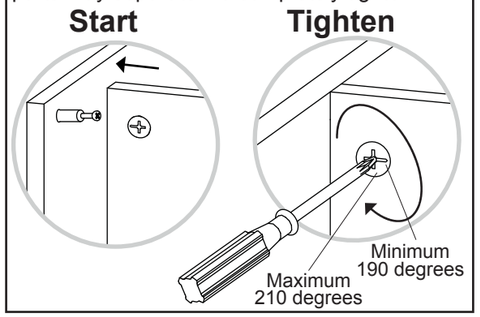


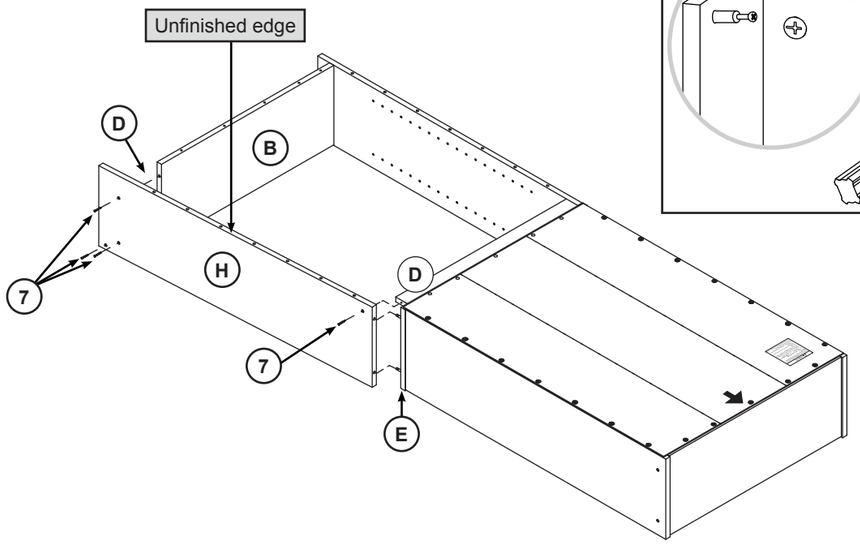


# STEP 10

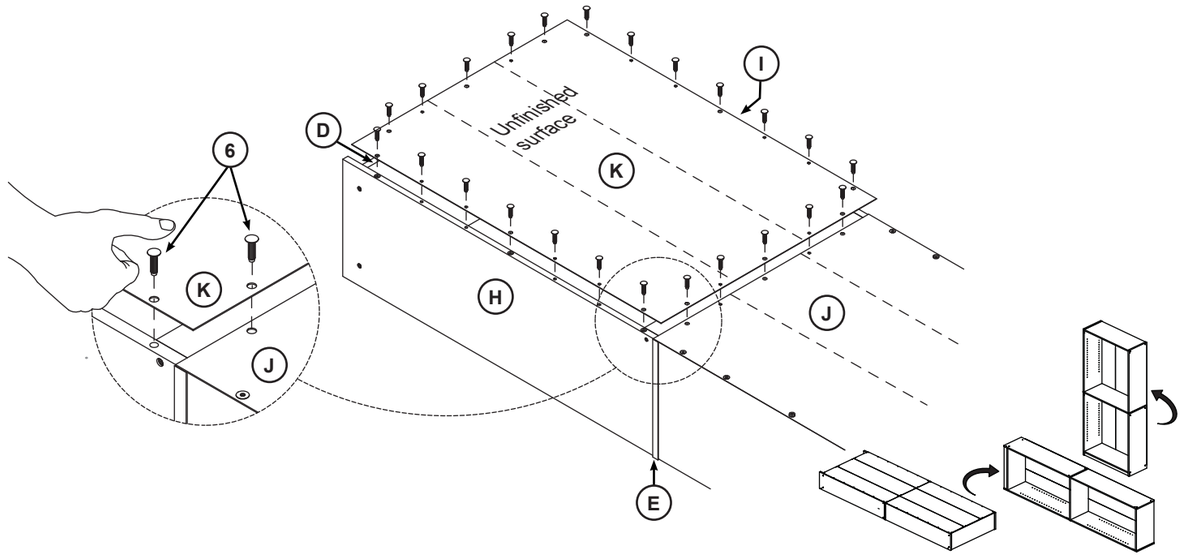


**CAUTION**

Do not stand the unit upright without the BACK fastened. The unit may collapse.

# STEP 7

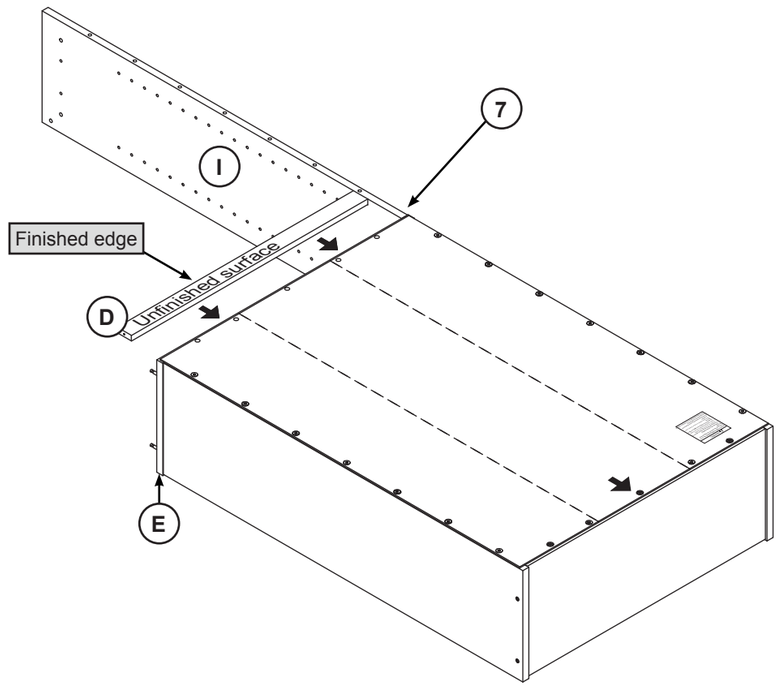


# STEP 8

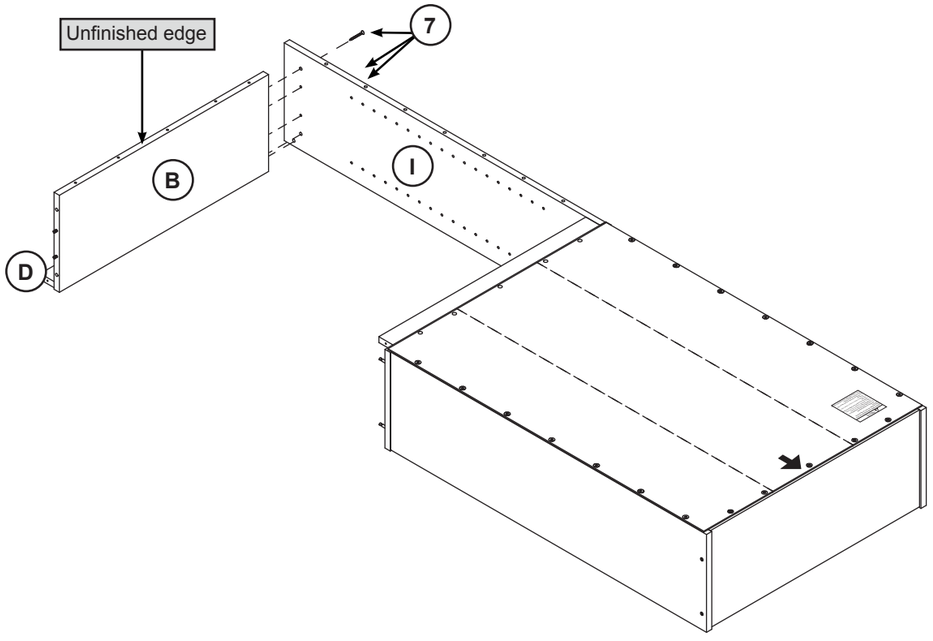




# STEP 1

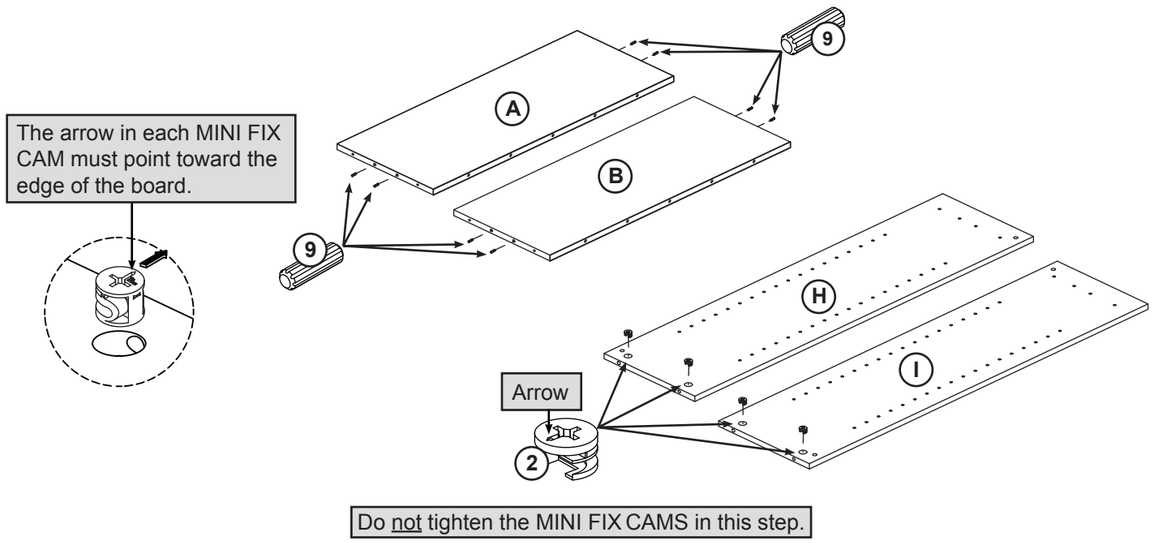


Do not tighten the MINI FIX CAMS in this step.

# STEP 2

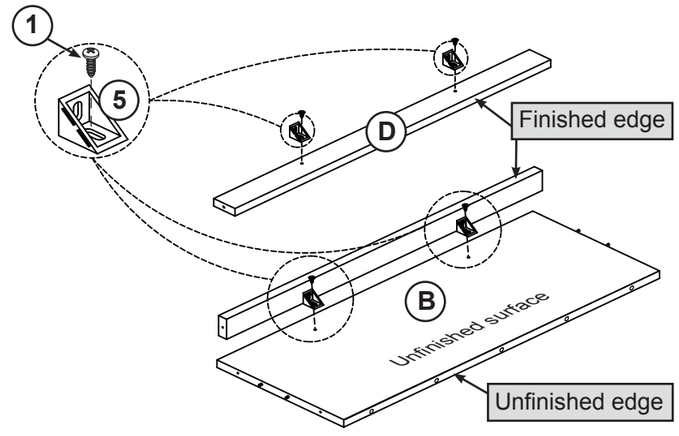

# STEP 3

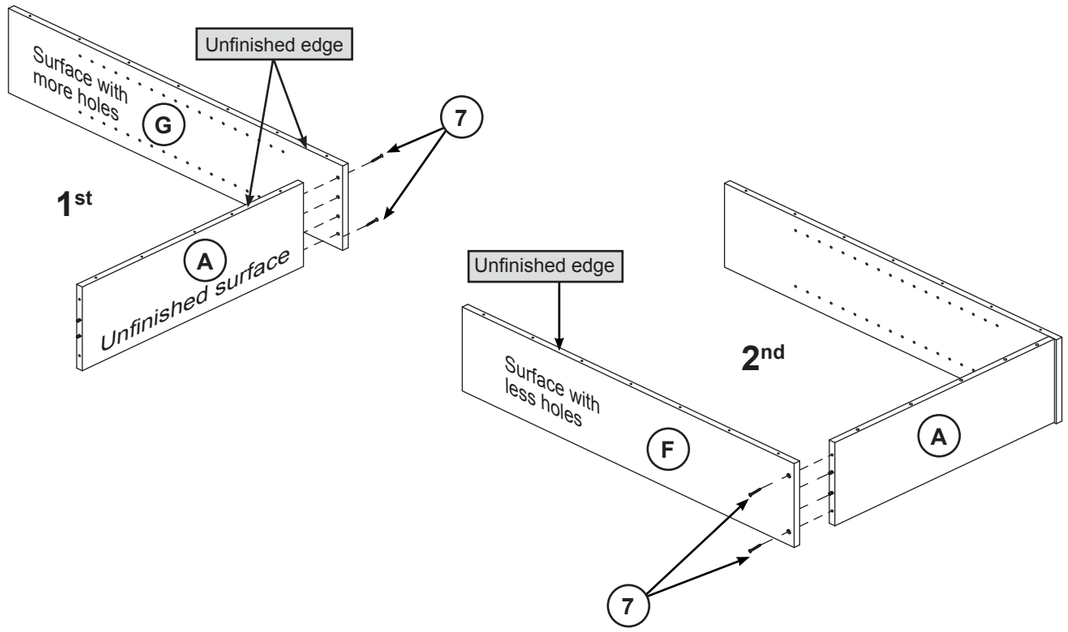


# STEP 4

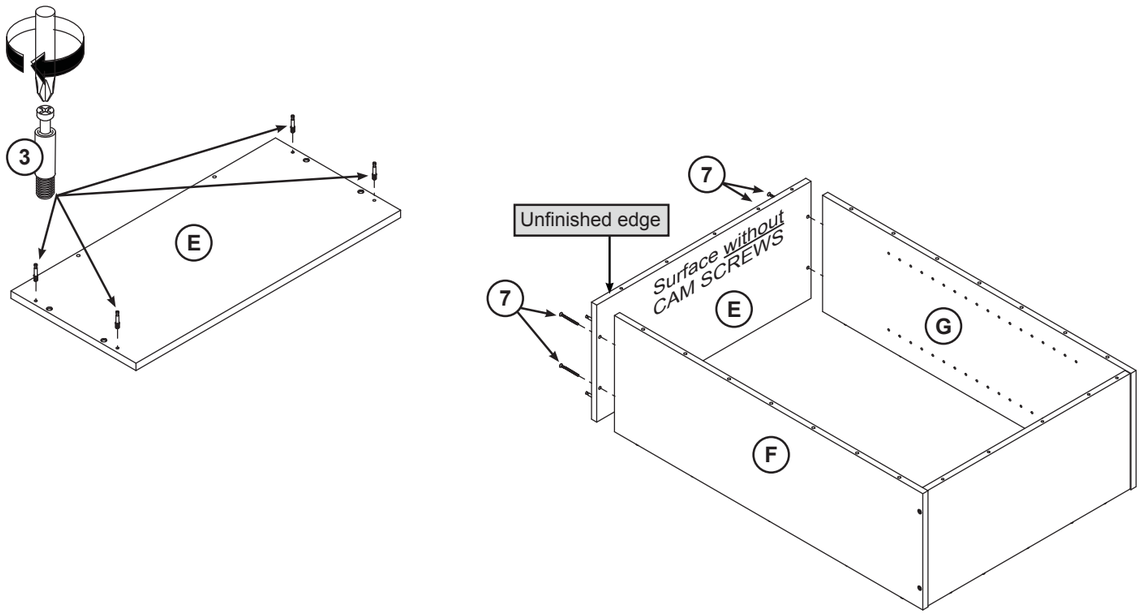




# STEP 5

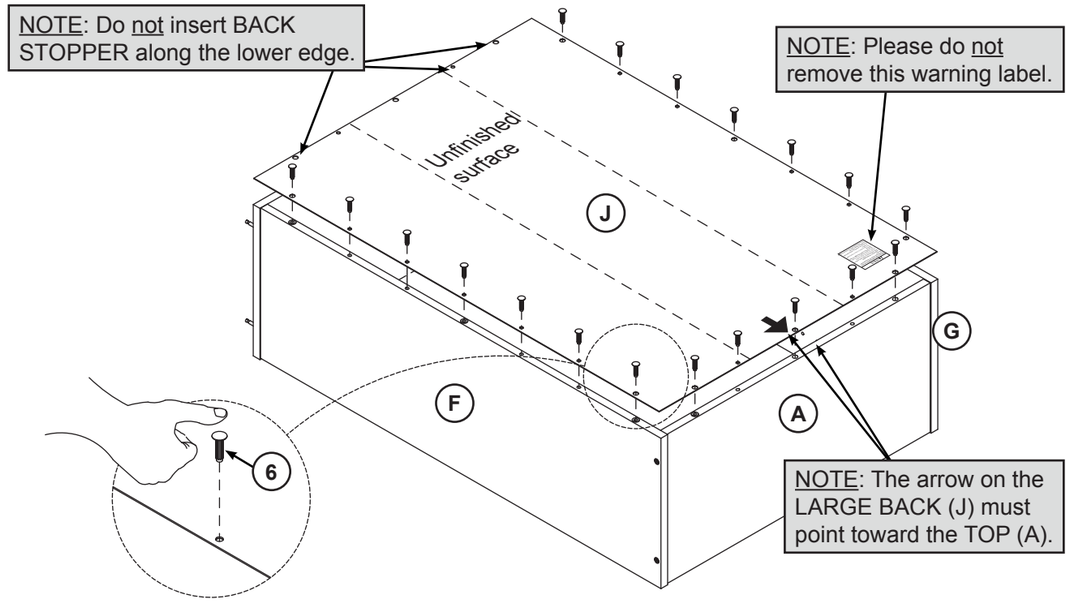


# STEP 6

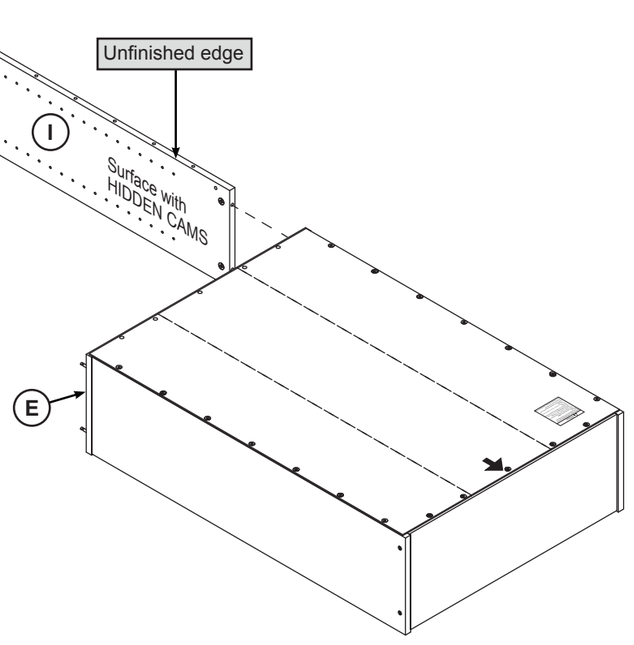


**⚠ CAUTION**

Risk of damage or injury. Mini Fix Cams must be completely tightened. Mini Fix Cams that are not completely tightened may loosen, and parts may separate. To completely tighten:

