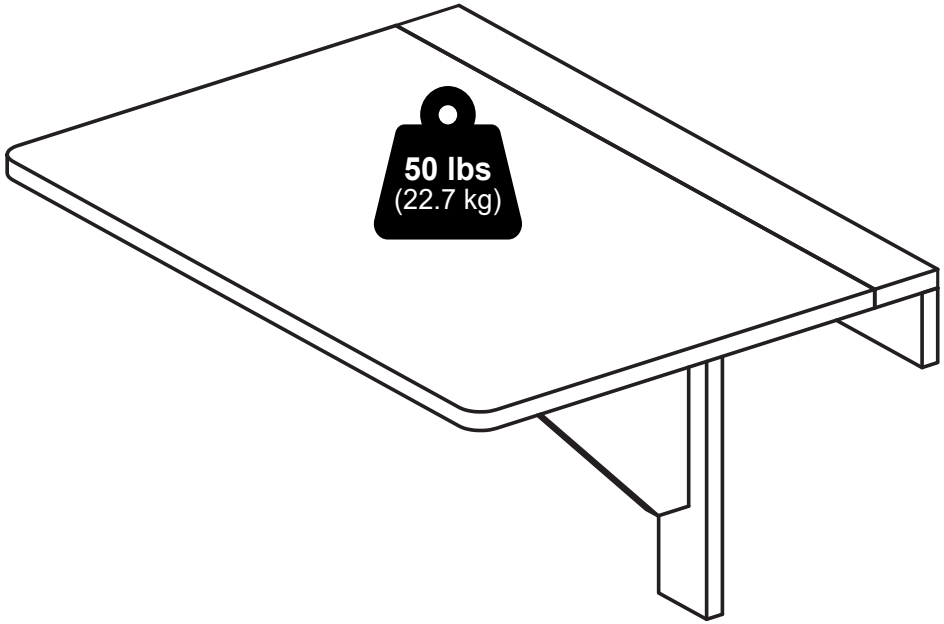

Furinno®
Fits Space, Fits Budget


00:30


x 2

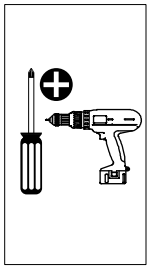

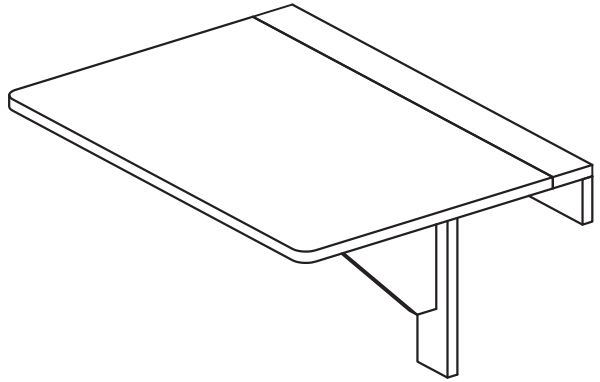

MODEL: 19148

support@furinno.com

www.furinno.com

1914820231030

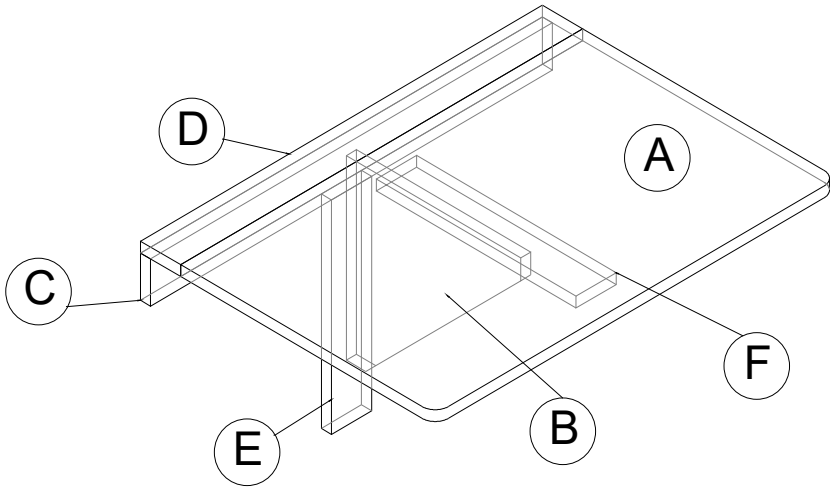

1 x 2 M6 x 30mm	2 x 5 50 x 30mm	3 x 24 M4 x 16mm	4 x 2 8 x 3/4"
5 x 1	6 x 3 M4 x38mm	7 x 5 6 x 40mm	8 x 5 6 x 40mm

7

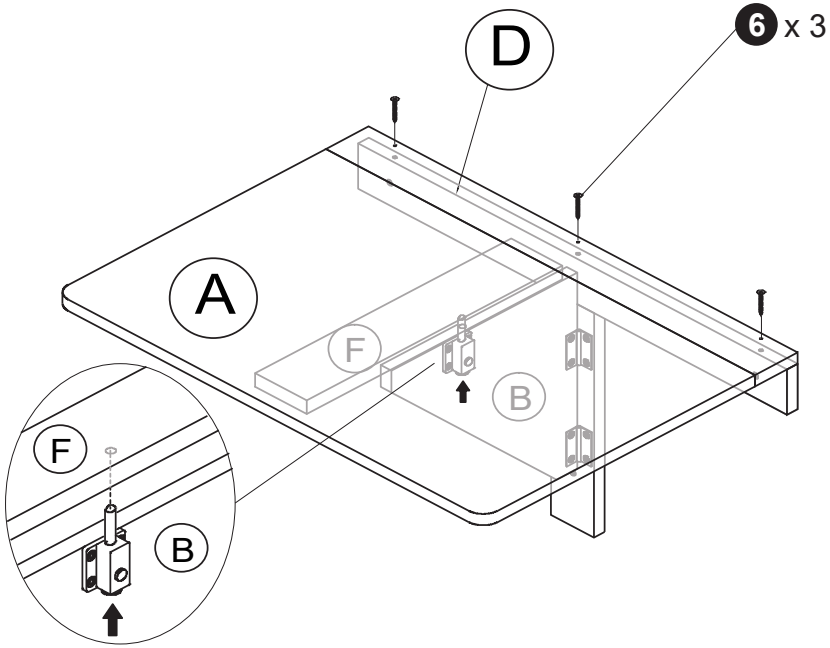

5

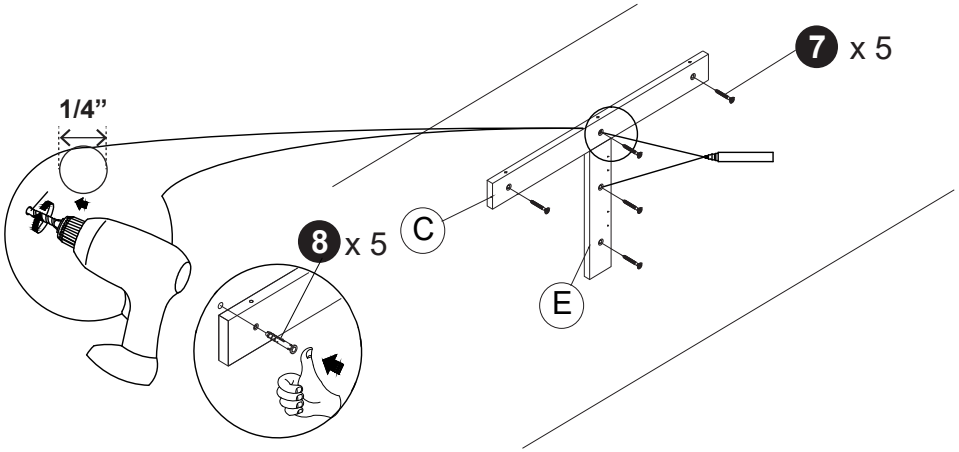

6

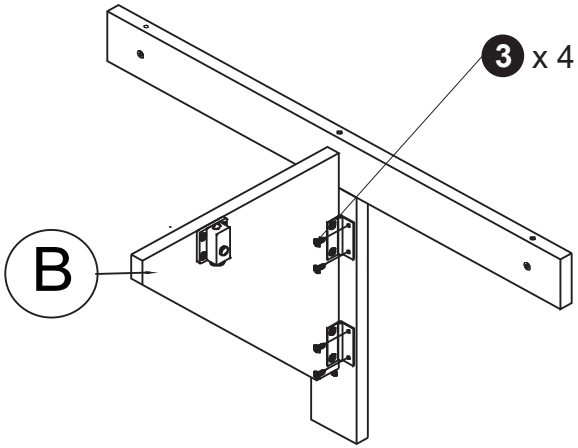

1

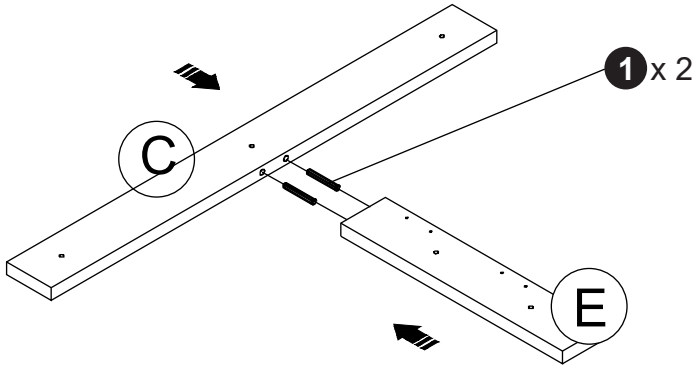

2

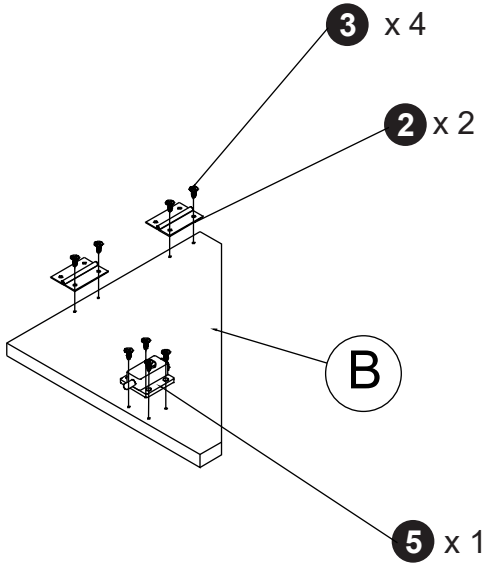

3

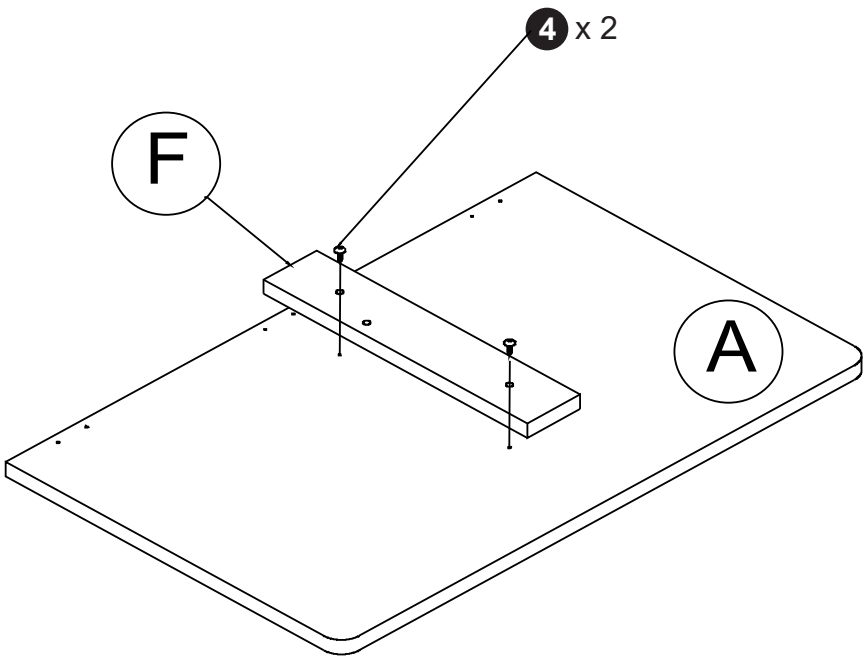

4

