STEP 11

WARNING

Serious or fatal crushing injuries can occur from furniture tipover.
To prevent tipover:
* Install tipover restraint provided
* Place heaviest items in the lowest drawers
* Unless specifically designed to accommodate, do not set TVs or other heavy objects on the top of this product
* Never allow children to climb or hang on drawers, doors, or shelves
* Never open more than one drawer at a time

Use of tipover restraints may only reduce, but not eliminate the risk of tipover

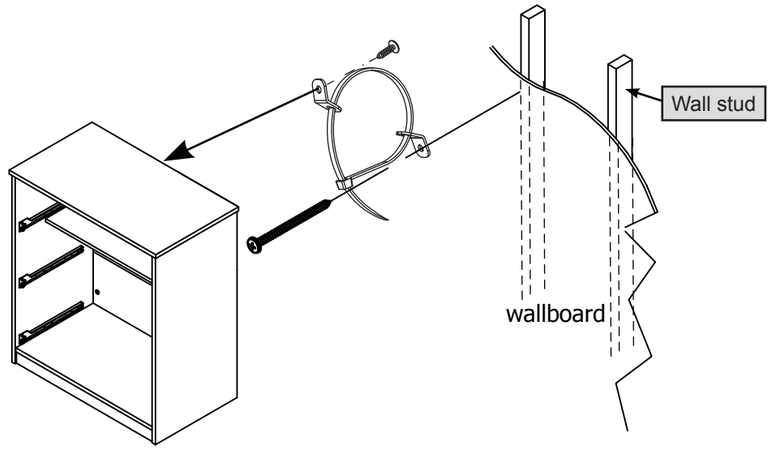

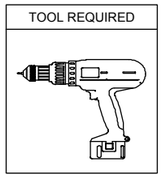

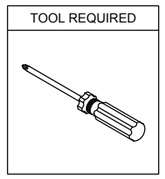

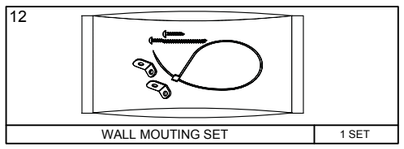

Installation Instructions:
This tip restraint must be attached to a wall stud using the 2" screw enclosed.
1. Attach a bracket securely to the back top rail of the furniture using the 5/8" screw provided, through the smaller hole.
2. Locate the other bracket on the wall over a wall stud and 2 inches below the mounting bracket secured to the back of your unit. Attach to the wall stud using the 2" screw provided, through the smaller hole.
3. Place the furniture into position so both mounting brackets are vertically in line.
4. Lace the end of the restraint strap through the larger hole in each mounting bracket. Bring both ends together and slide the flat end through the locking end and draw it through until all slack is removed.
5. Confirm that the strap is securely laced and locked.

STEP 12

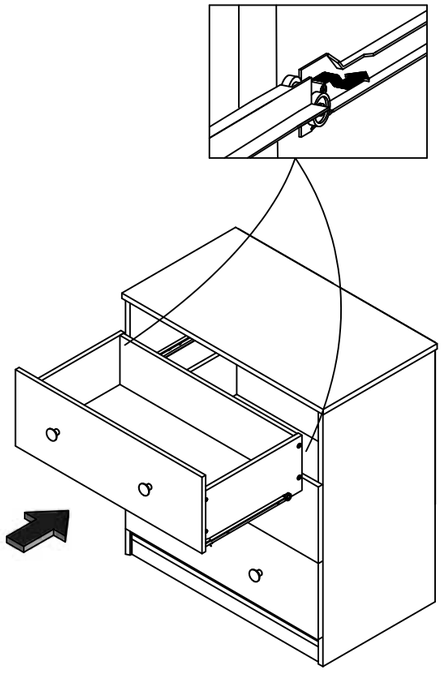

Recommended Maximum Weight

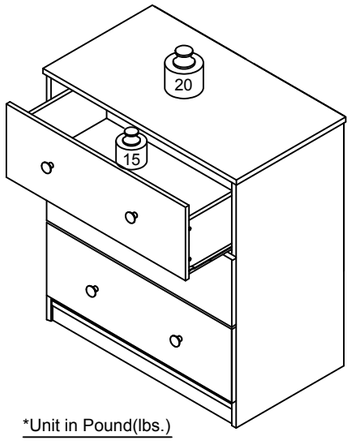

*Unit in Pound(lbs.)

WARNING:

>This unit has been designed to support the maximum loads shown. Exceeding these load limits could cause sagging, instability, product collapse, and/or serious injury.

> Put heavier items on lower shelves.

Furinno®
Fits Space, Fits Budget

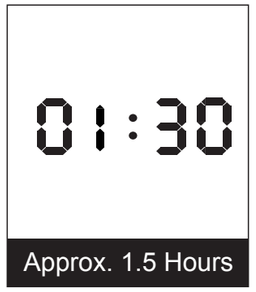



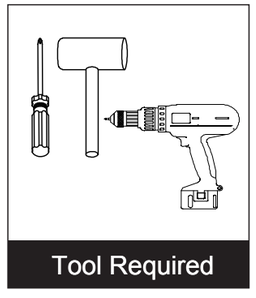

Assembly Instruction

Furinno 3-Drawer Dresser
MODEL : **19154**

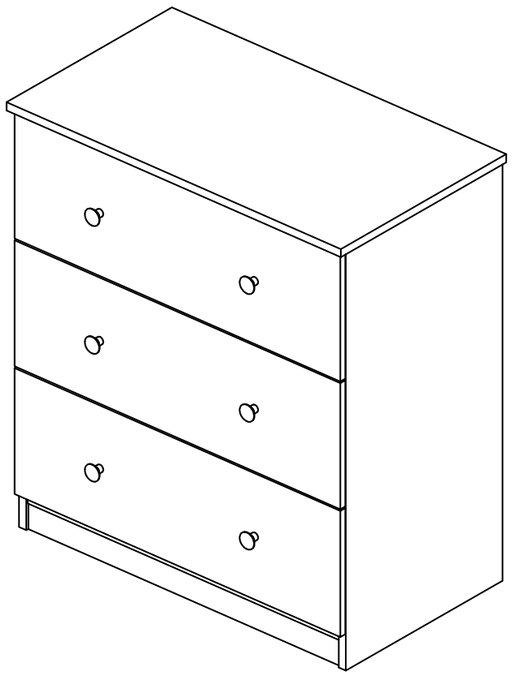

Customer Support

NEED HELP? For replacement requests or product inquiries, please contact our Customer Service Team by emailing us at **support@furinno.com**. Thank you for selecting Furinno!

www.furinno.com

1915420211117

EXPLODED VIEW

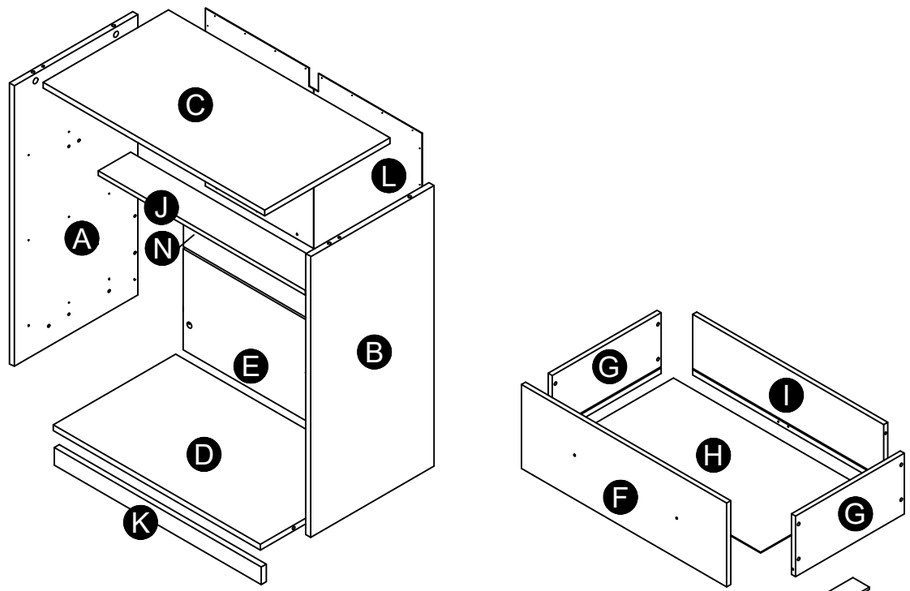

PARTS LIST

A	LEFT PANEL	1 PC
B	RIGHT PANEL	1 PC
C	TOP PANEL	1 PC
D	BOTTOM PANEL	1 PC
E	BOTTOM BACK PANEL	1 PC
F	DRAWER FRONT	3 PCS
G	DRAWER SIDE	6 PCS
H	DRAWER BOTTOM	3 PCS
I	DRAWER BACK	3 PCS
J	SUPPORT PANEL	1 PC
K	KICK PANEL	1 PC
L	UPPER BACK PANEL	1 PC
M	DRAWER SUPPORT	3 PCS
N	SUPPORT PANEL	1 PC

HARDWARE LIST

1 CAM BOLT	14 PCS	
2 CAM LOCK	14 PCS	
3 DOWEL	22 PCS	
4 FLAT HEAD SCREW	36 PCS	
5 PAN HEAD SCREW	38 PCS	
6 POWER PIN	18 PCS	
7 DRIVE FASTENER	12 PCS	
8 HANDLE SCREW	6 PCS	
9 L BRACKET	4 PCS	
10 DRAWER SLIDE (CL, CR, DL, DR)	3 SETS	
11 DRAWER BRACKET	6 PCS	
12 WALL MOUTING SET	1 SET	
13 HANDLE KNOB	6 PCS	

USEFUL HINTS BEFORE YOU START:

1. Read each step carefully before starting.
2. It is important that each step is performed in correct order to avoid difficulties.
3. Identify, soft and count the parts before assembly.
4. Assemble your furniture on packaging cardboard to prevent scratch or damage.
5. Clean the product with mild cleanser using soft damped cloth. Do not use harsh or abrasive cleanser.
6. Using incompatible hardware might cause damage to product.

STEP 9

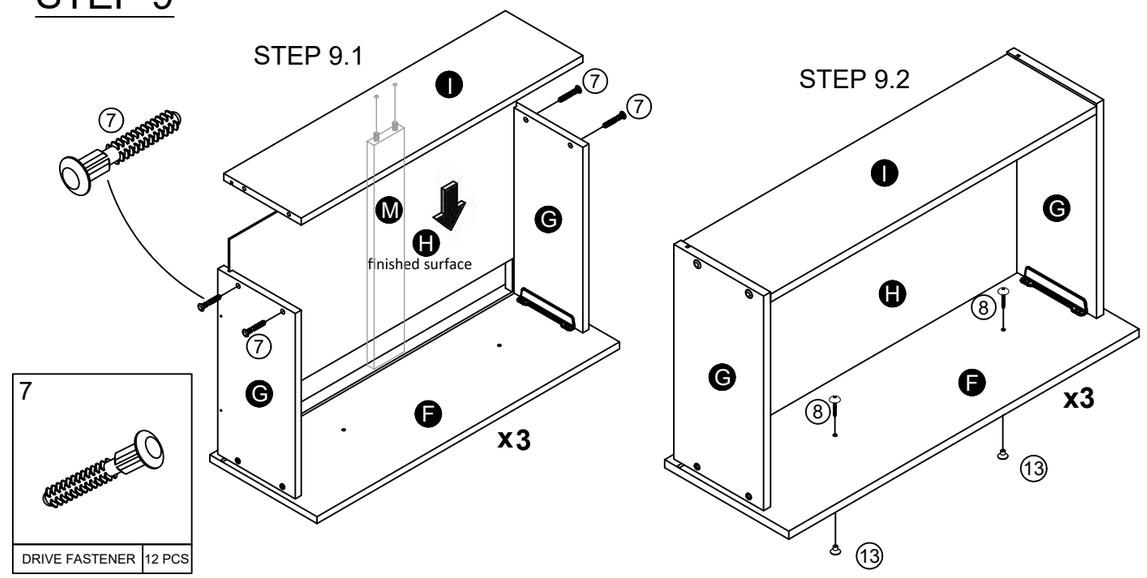

7	DRIVE FASTENER	12 PCS
8	HANDLE SCREW	6 PCS
13	HANDLE KNOB	6 PCS

TOOL REQUIRED	TOOL REQUIRED

STEP 10

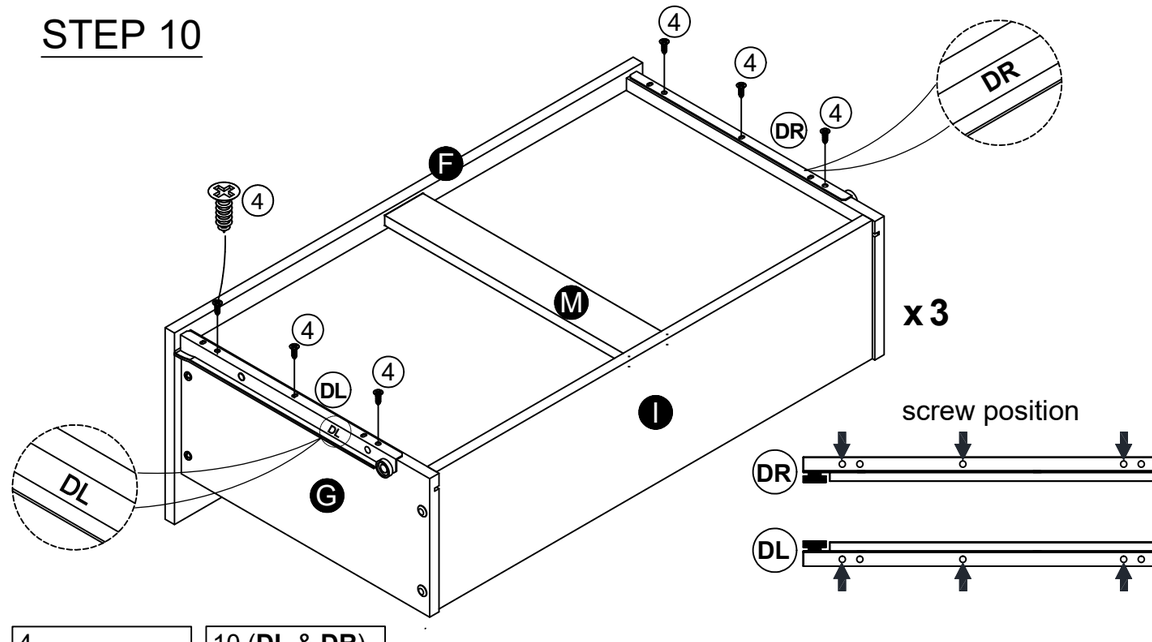

4	FLAT HEAD SCREW	18 PCS
10 (**DL** & **DR**)	DRADWER SLIDE	3 SETS

TOOL REQUIRED

STEP 7

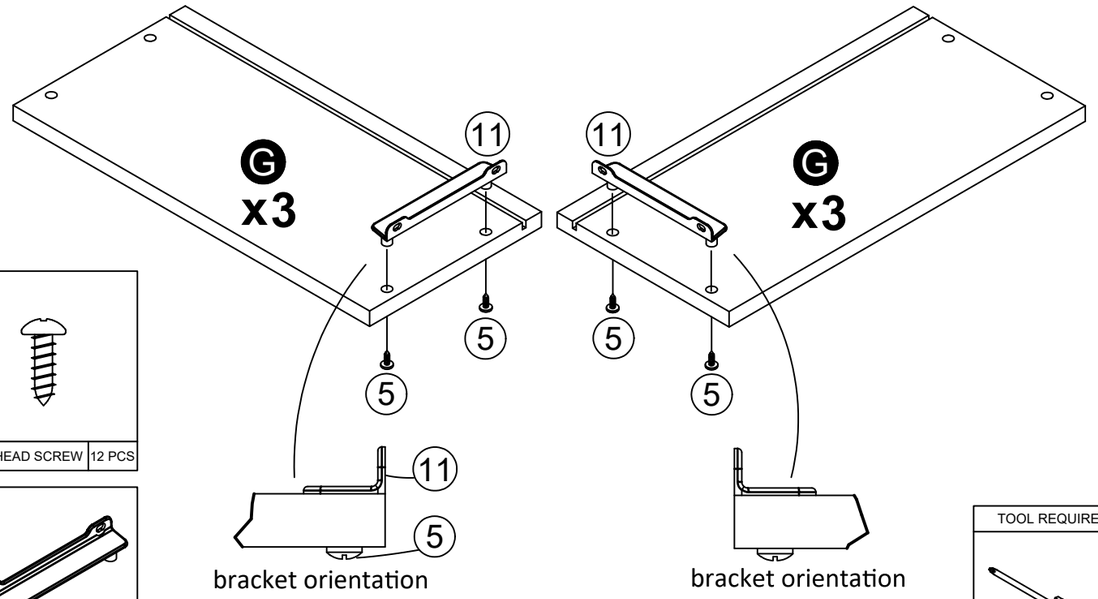

5	
PAN HEAD SCREW	12 PCS

11	
DRAWER BRACKET	6 PCS

TOOL REQUIRED

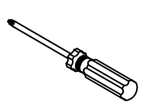

STEP 8

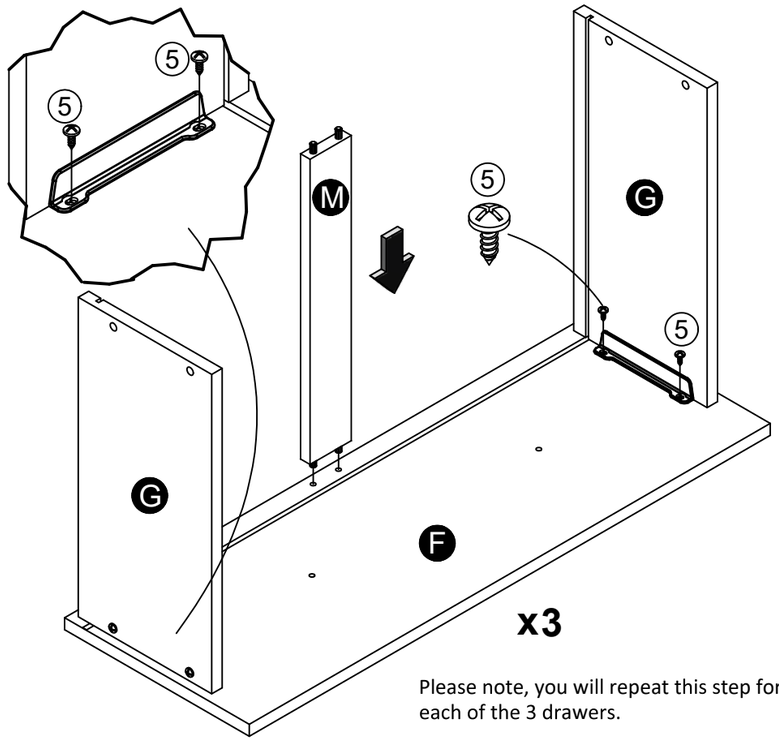

Please note, you will repeat this step for each of the 3 drawers.

5	
PAN HEAD SCREW	12 PCS

TOOL REQUIRED

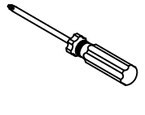

STEP 1

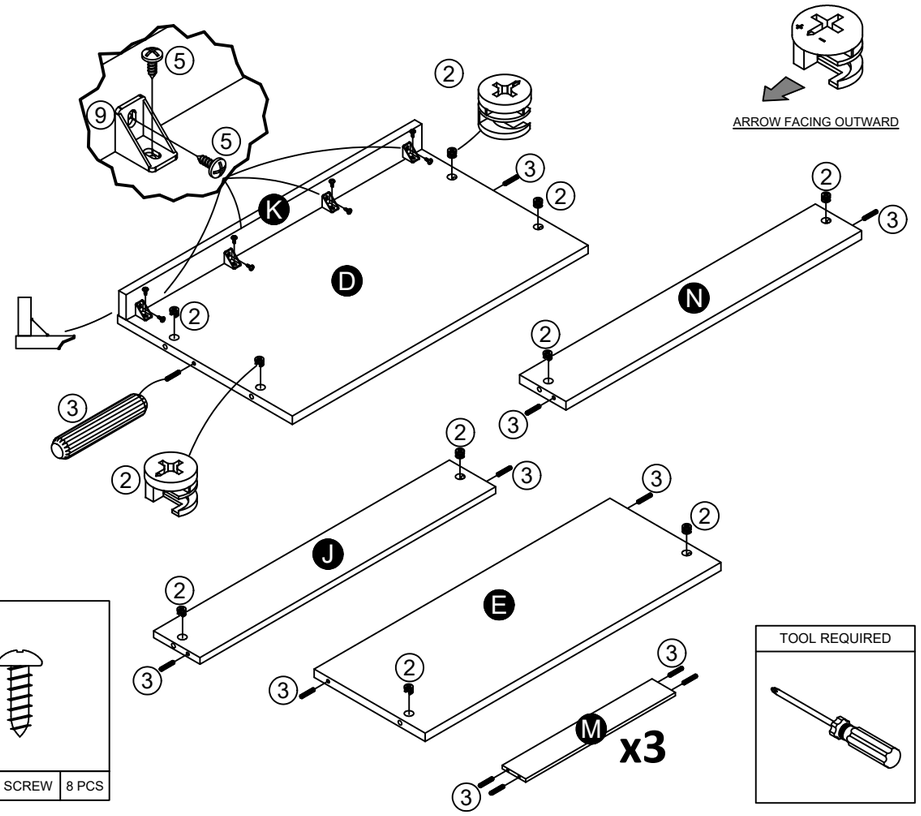

9	
L BRACKET	4 PCS

2	
CAM LOCK	10 PCS

3	
DOWEL	20 PCS

5	
PAN HEAD SCREW	8 PCS

TOOL REQUIRED

STEP 2

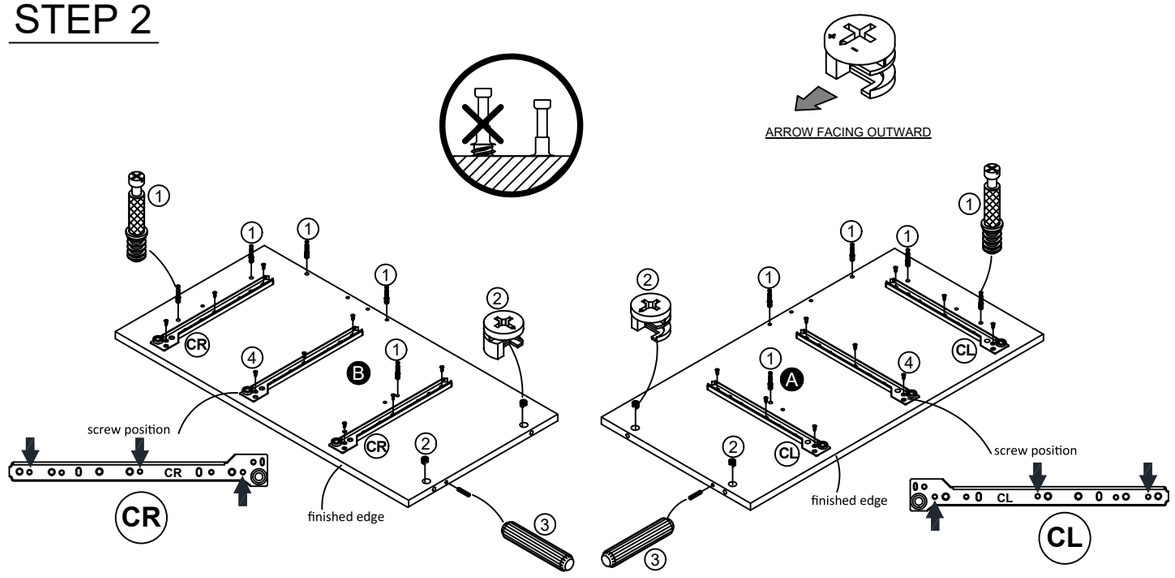

1	
CAM BOLT	10 PCS

2	
CAM LOCK	4 PCS

4	
FLAT HEAD SCREW	18 PCS

3	
DOWEL	2 PCS

10 (**CL** & **CR**)	
DRAWER SLIDE	3 SETS

TOOL REQUIRED

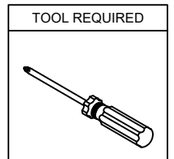

STEP 3

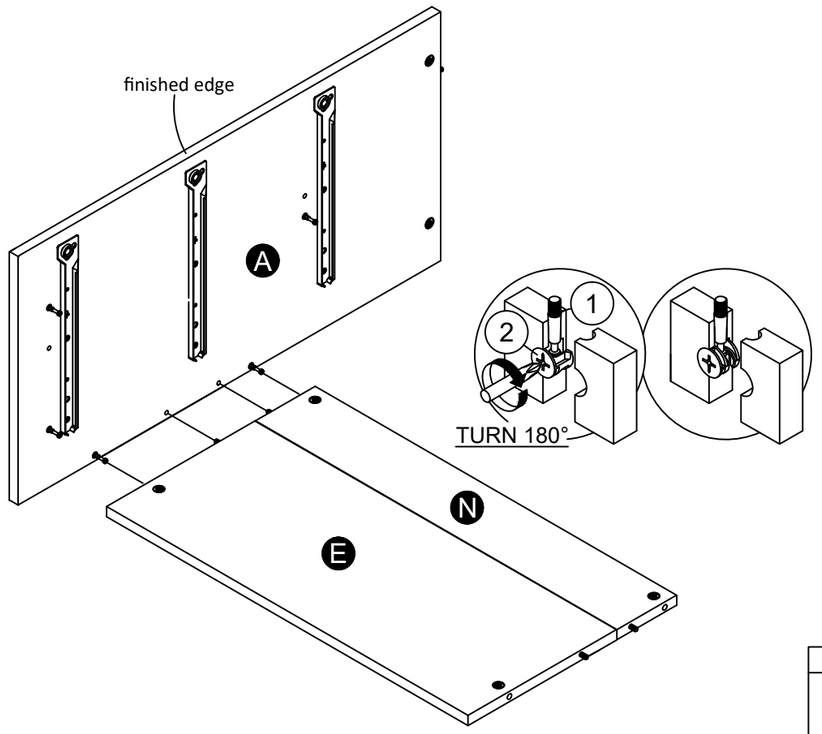

TOOL REQUIRED

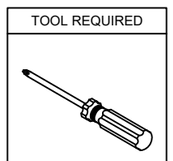

STEP 4

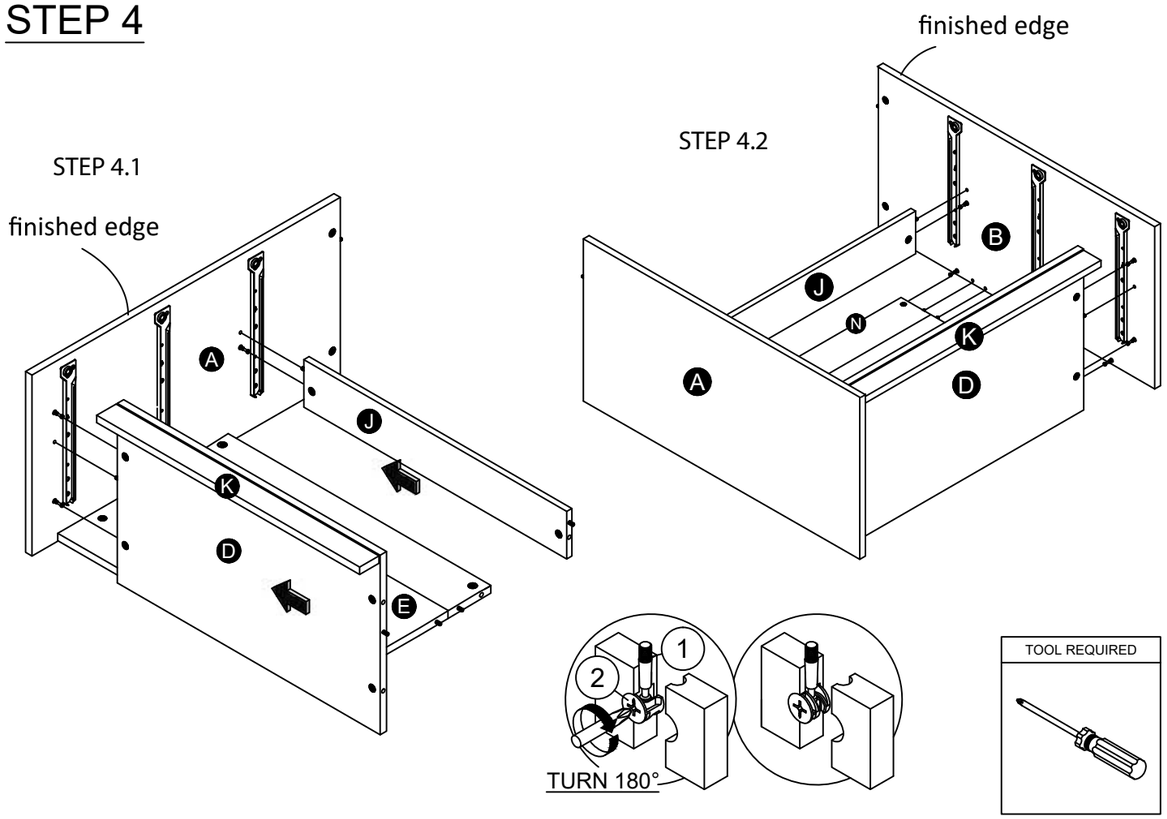

TOOL REQUIRED

STEP 5

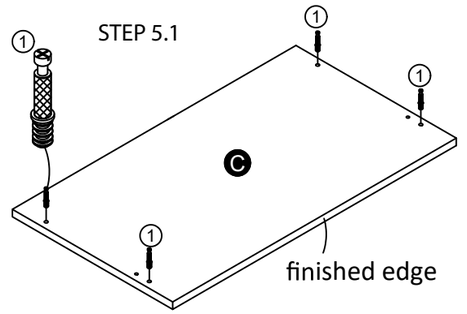

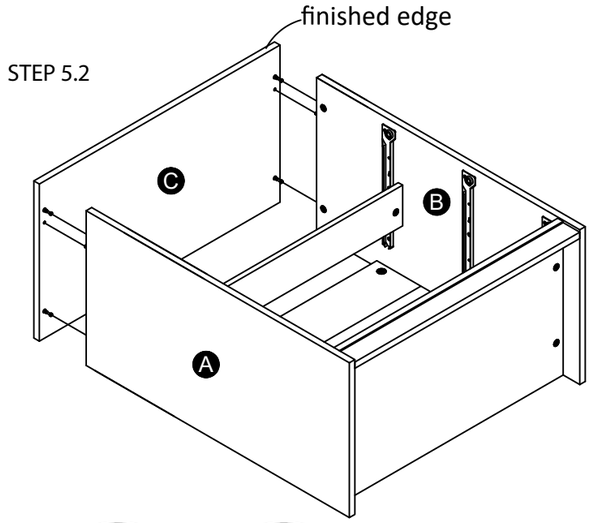

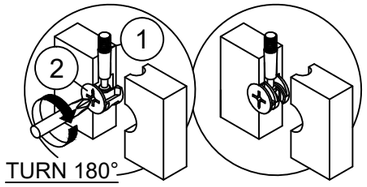

1



CAM BOLT	4 PCS

TOOL REQUIRED

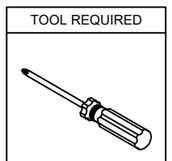

STEP 6

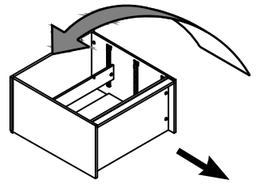

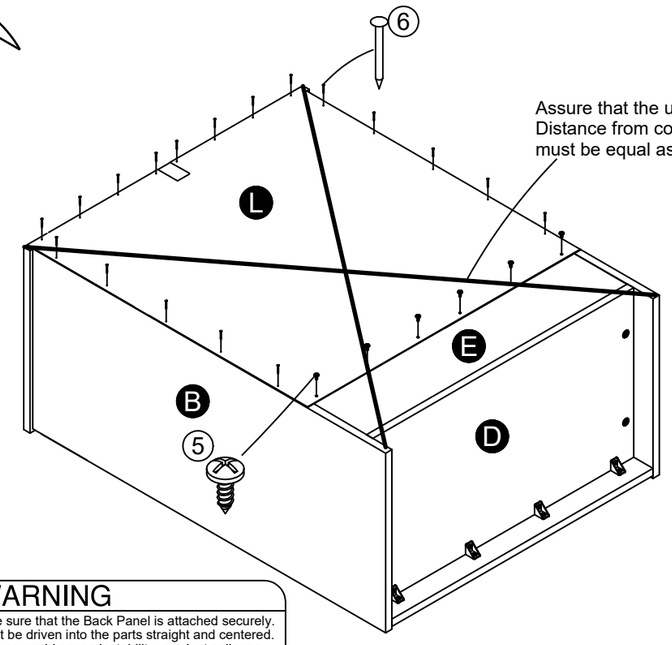

6

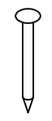

POWER PIN	18 PCS

5



PAN HEAD SCREW	6 PCS

⚠ WARNING

Please make sure that the Back Panel is attached securely. All nails must be driven into the parts straight and centered. Failure to do so could cause instability, product collapse, and/or serious injury.

TOOL REQUIRED

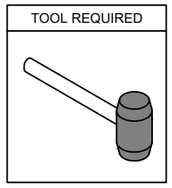

TOOL REQUIRED

