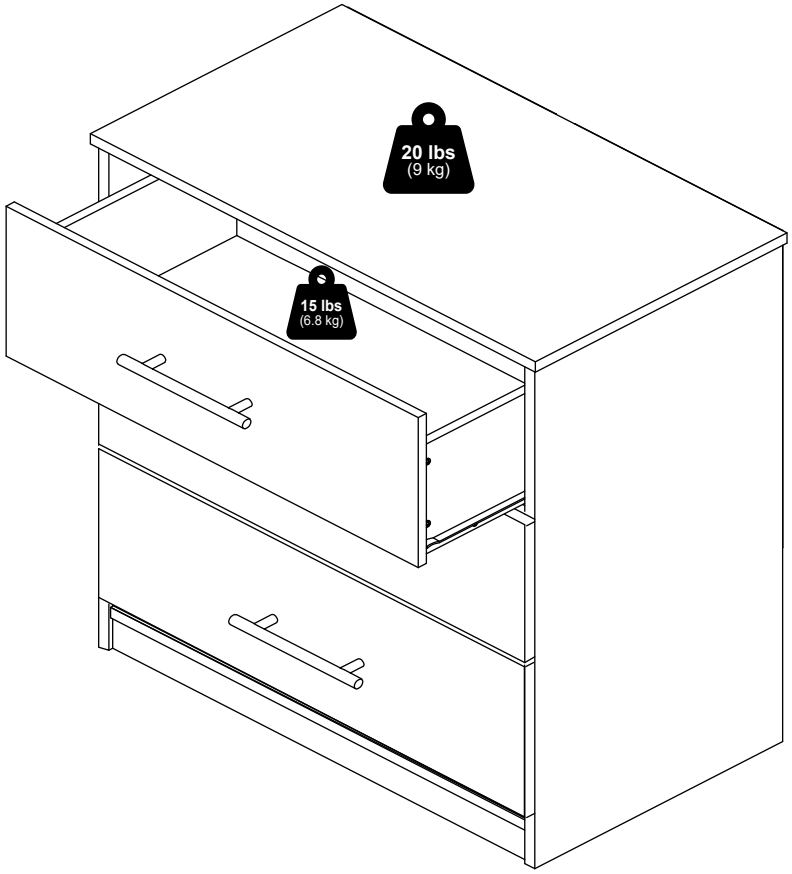




Furinno®

Fits Space, Fits Budget






**MODEL: 19154H**

support@furinno.com

www.furinno.com



19154H20230602

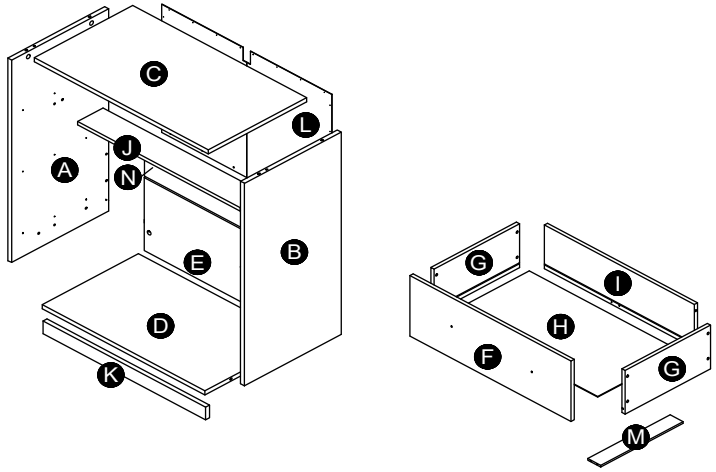





| | | | |
|---|---|---|---|
| 1 x 14 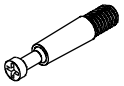 M6 X 31mm | 2 x 14  15mm | 3 x 22 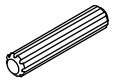 M6 X 30mm | 4 x 36  M3.5 X 12mm |
| 5 x 38  M4 x11mm | 6 x 18 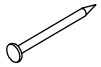 2.5 x 18mm | 7 x 12 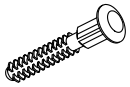 | 8 x 6  M4 X 19mm |
| 9 x 4  17 X 22mm | 10 x 3 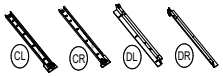  | 11 x 6 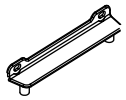 96mm | 12 x 1 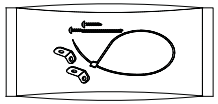 |
| 13 x 3 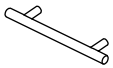 Ø10 x 96mm | | 14 x 1 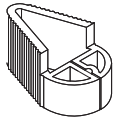 | |



11

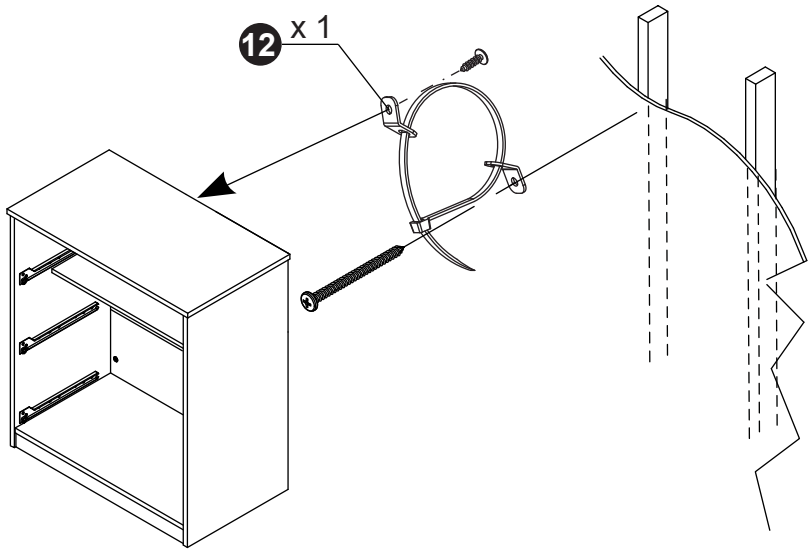


12

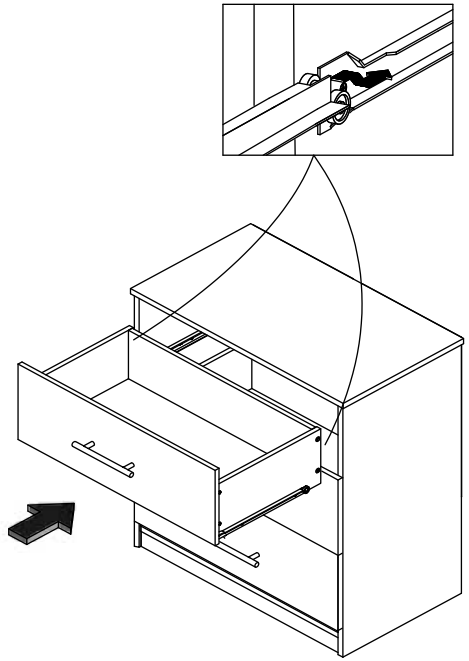

# 10

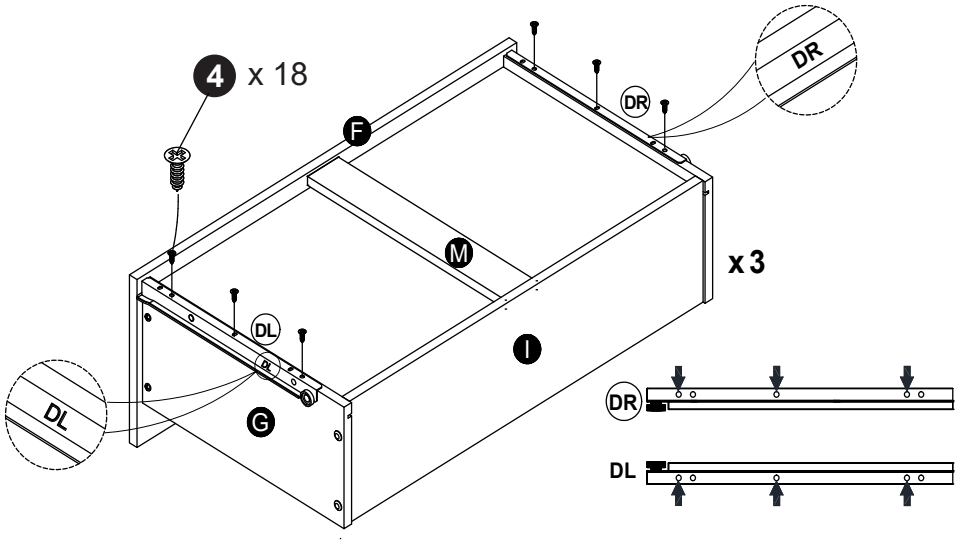
4 x 18
F
M
x 3
DR
DR
DL
DL
G
I
DR
DL



# 1

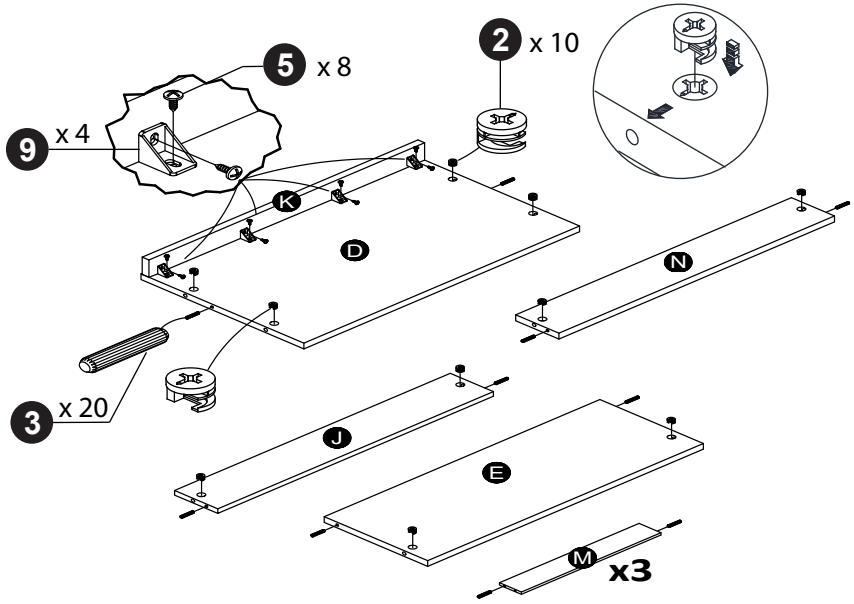
5 x 8
2 x 10
9 x 4
K
D
N
3 x 20
J
E
M
x3

# 2

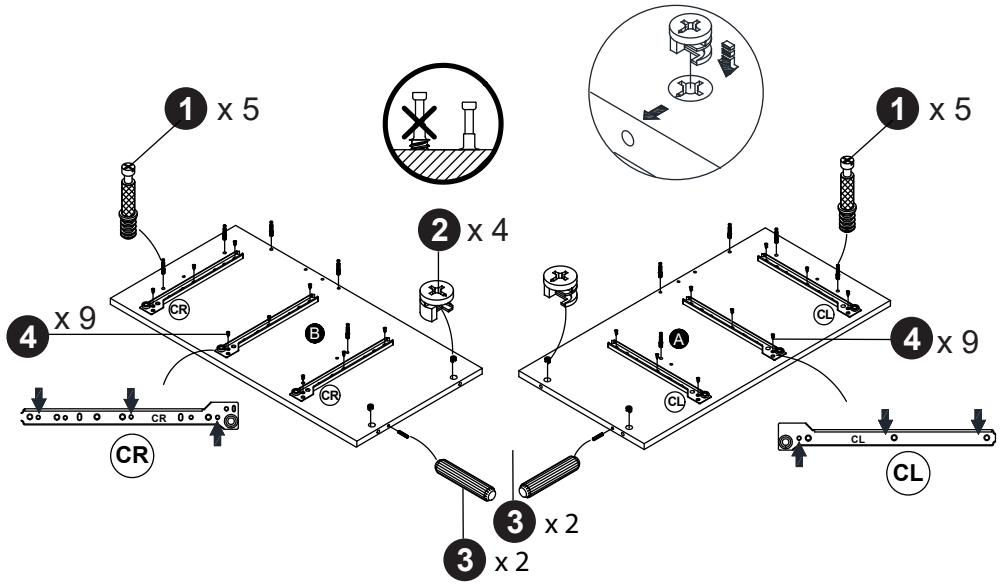
1 x 5
1 x 5
2 x 4
4 x 9
4 x 9
CR
B
CR
CR
CR
A
CL
CL
CL
CL
3 x 2
3 x 2

## 3

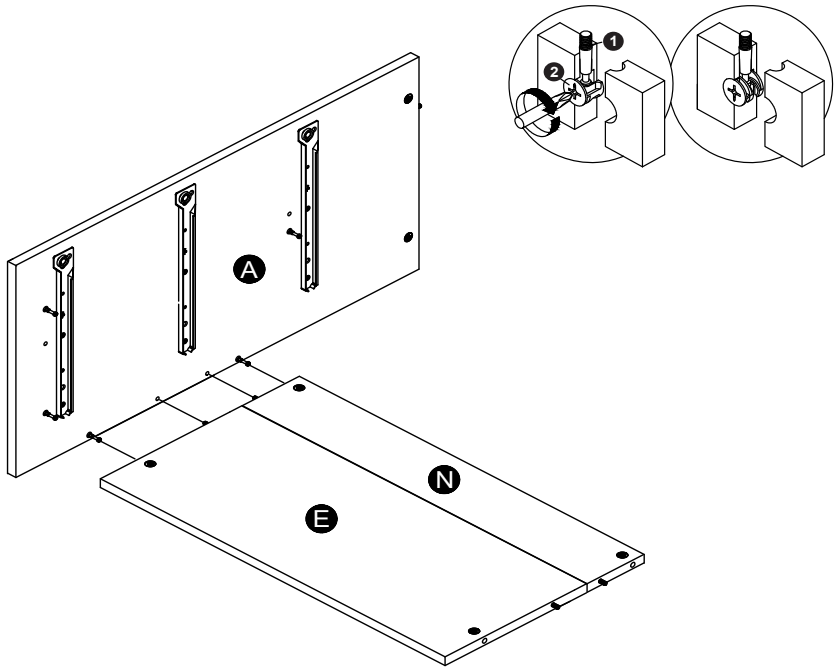


## 4

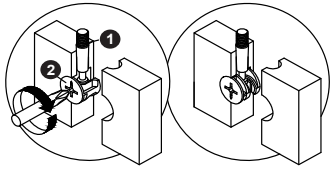


**4.1**

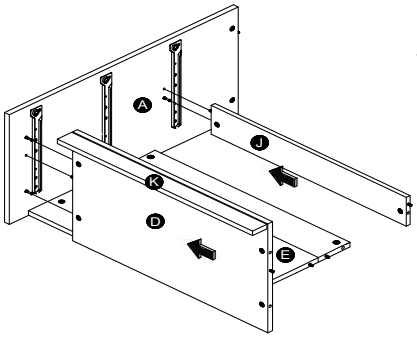


**4.2**

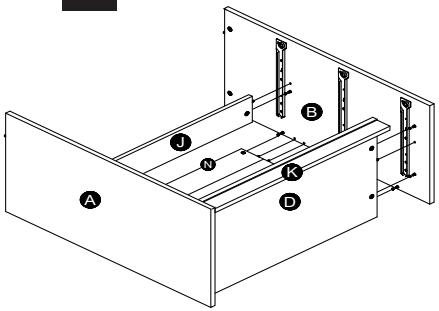




## 9

**9.1**

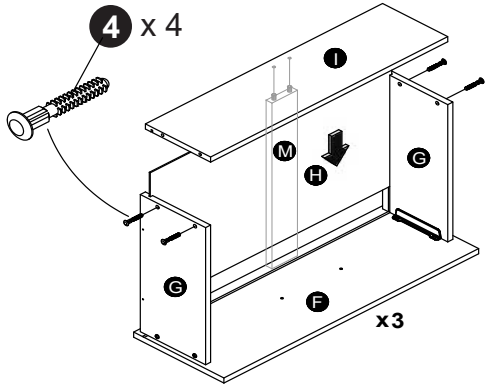


**9.2**

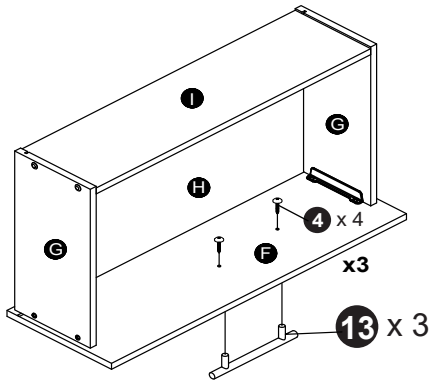

# 8

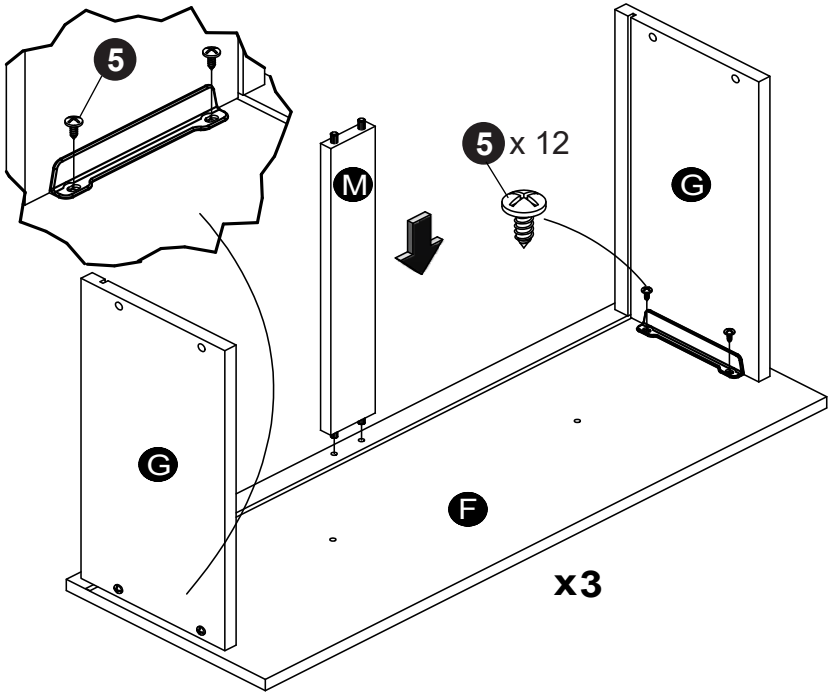




# 5

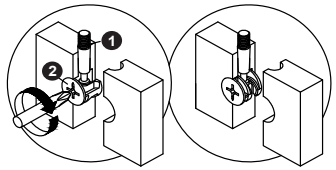


**5.1**

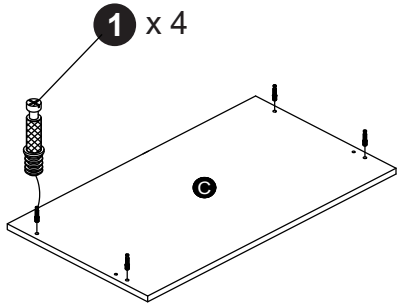


**5.2**

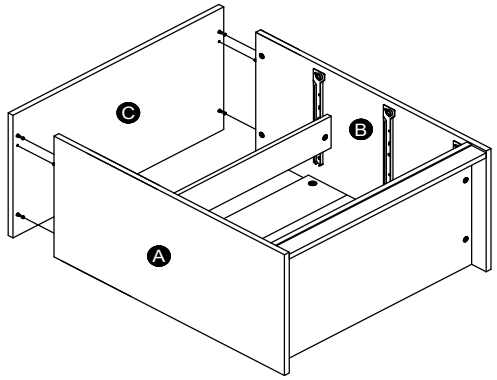

# 6

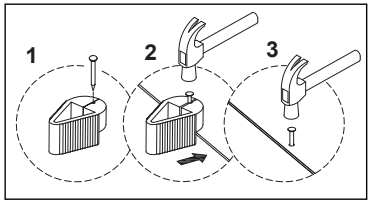


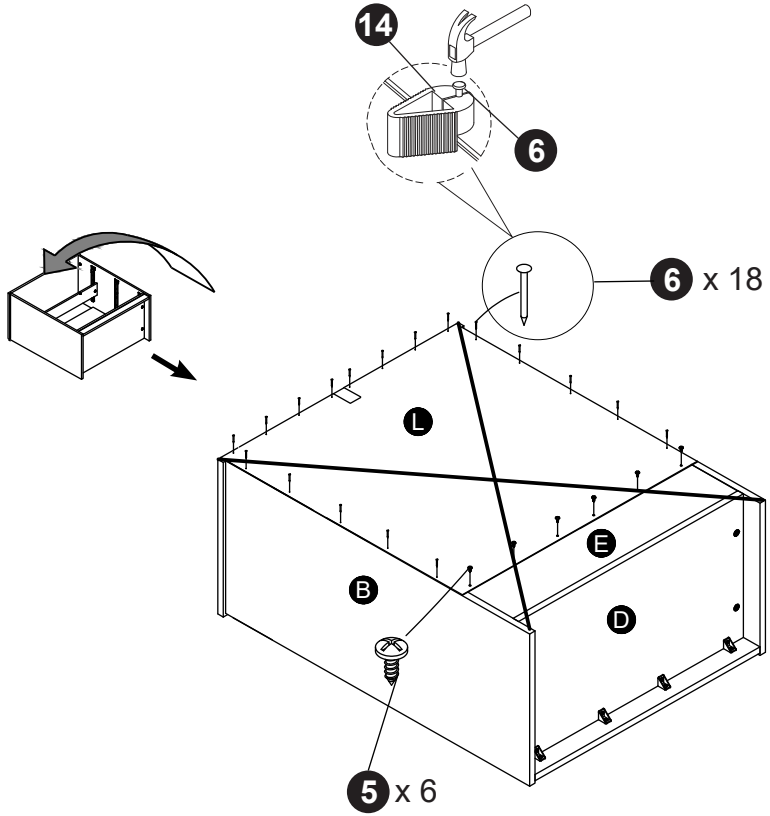




# 7

