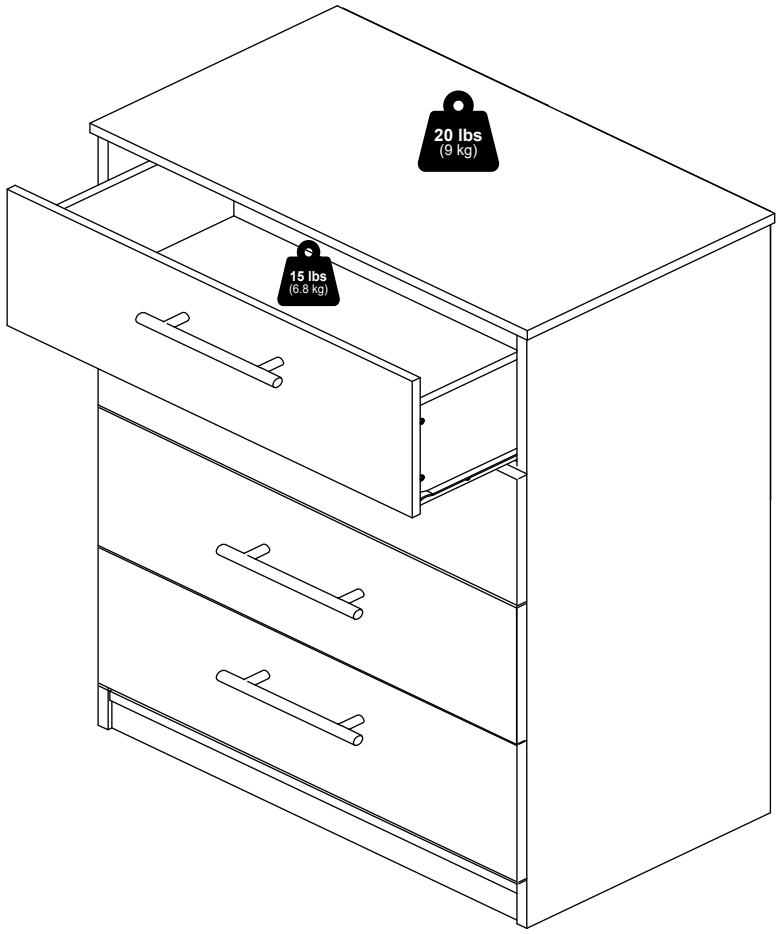

Furinno®

Fits Space, Fits Budget





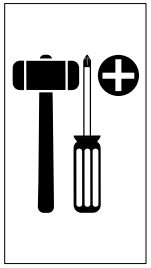

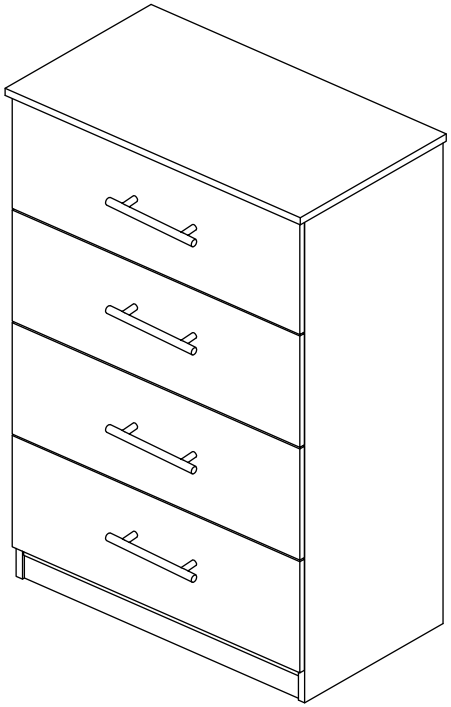

MODEL: 19155H

support@furinno.com

www.furinno.com

19155H20230602

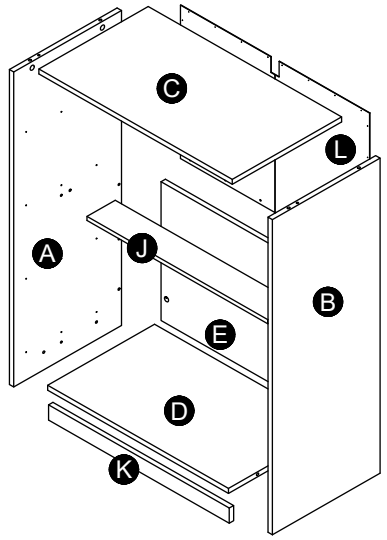

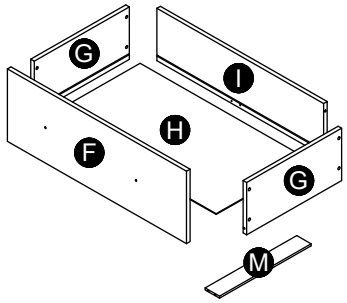

1 x 12 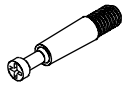 M6 x 31mm	2 x 12  15mm	3 x 24 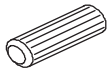 M6 x 30mm	4 x 48  M3.5 x 12mm
5 x 46  M4 x11mm	6 x 18 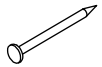 2.5 x 18mm	7 x 16 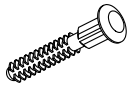	8 x 8  M4 x 19mm
9 x 4  17 x 22mm	10 x 4 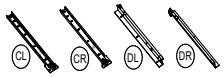	11 x 8 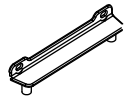 96mm	12 x 1 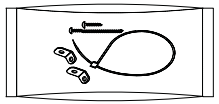
13 x 4  Ø10 x 96mm		14 x 1 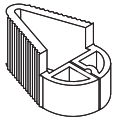	

11

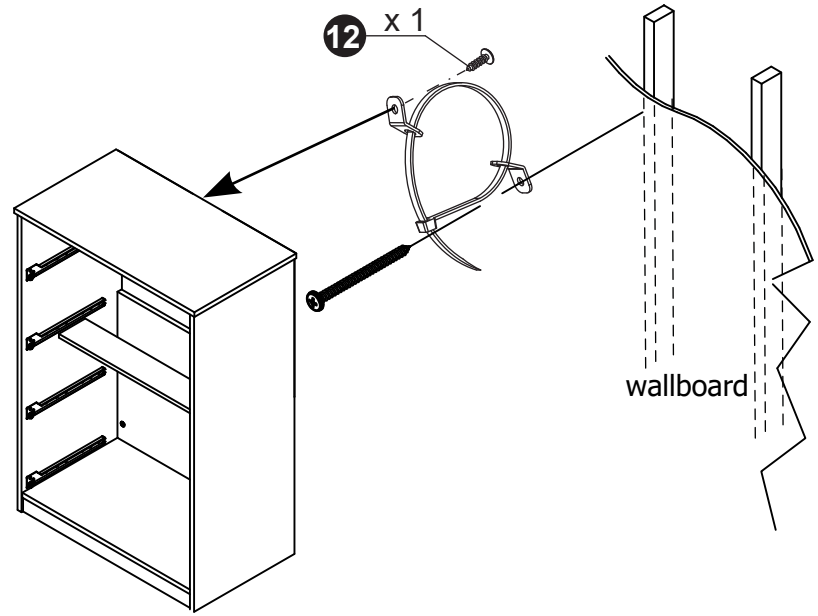

12

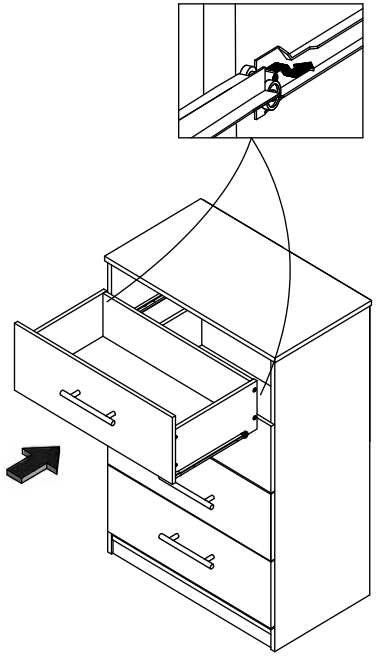

10

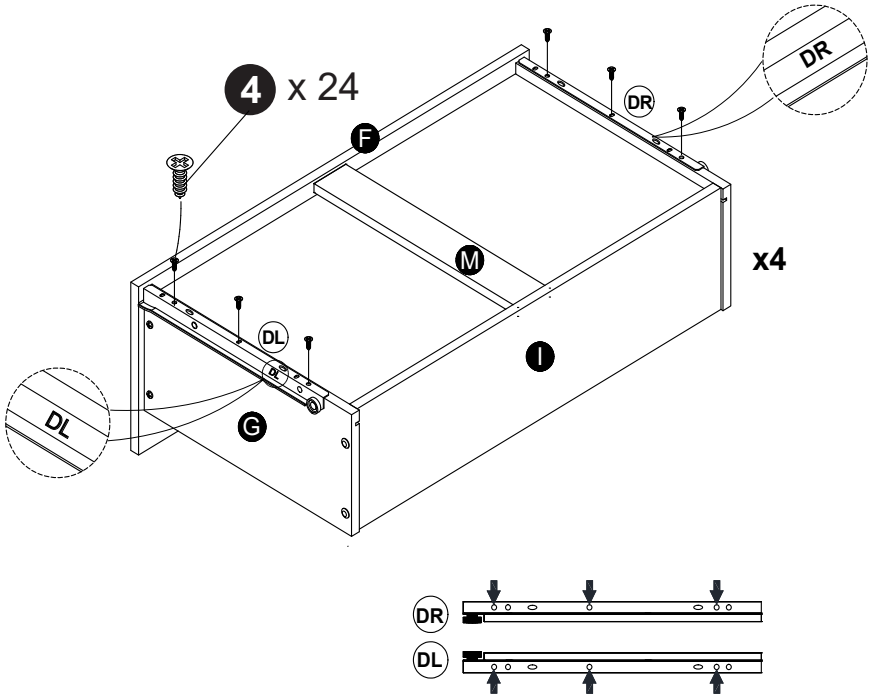
4 x 24
F
DR
DR
M
x4
DL
DL
G
I

DR
DL

1

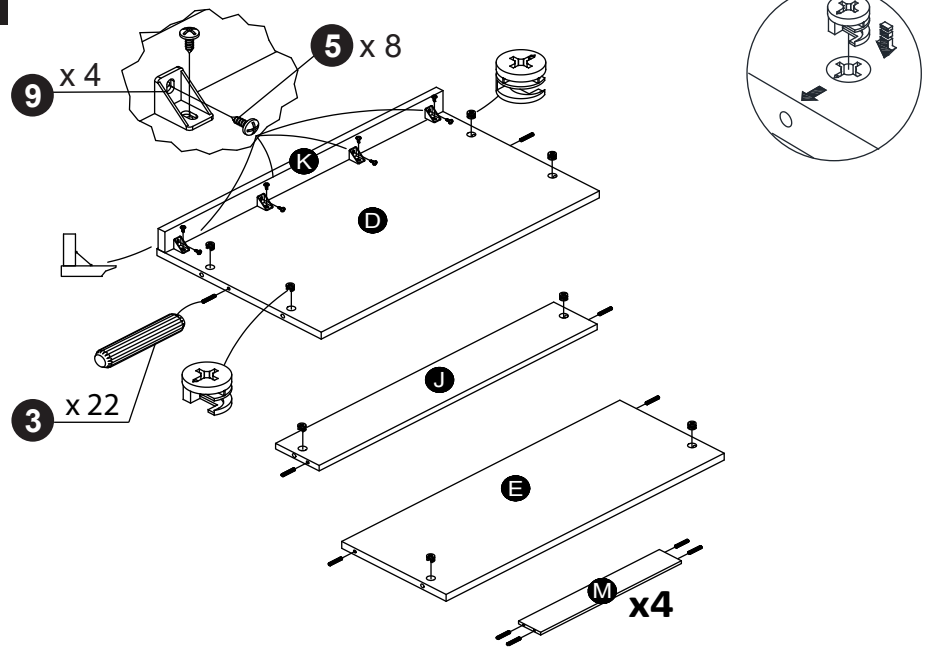
9 x 4
5 x 8
K
D
3 x 22
J
E
M
x4

2

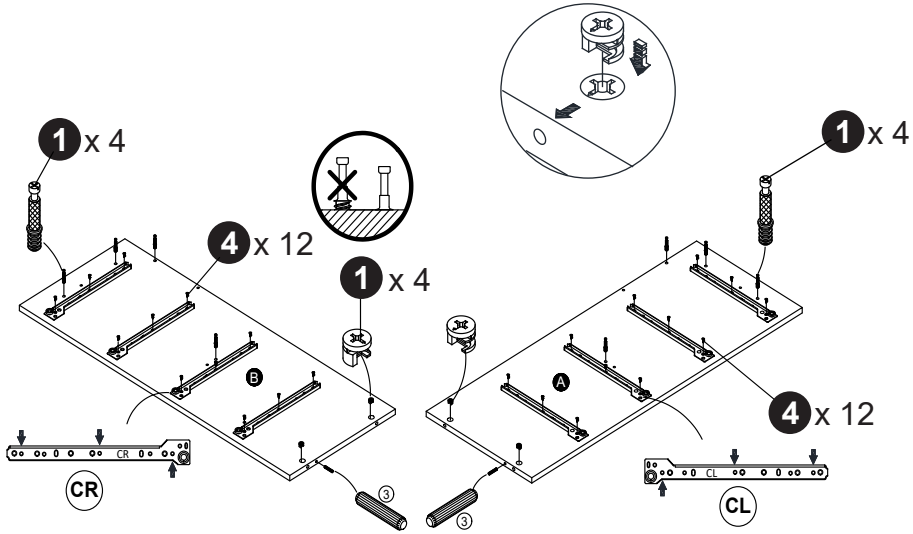
1 x 4
4 x 12
1 x 4
1 x 4
B
A
4 x 12
CR
CR
CL
CL
3
3

3

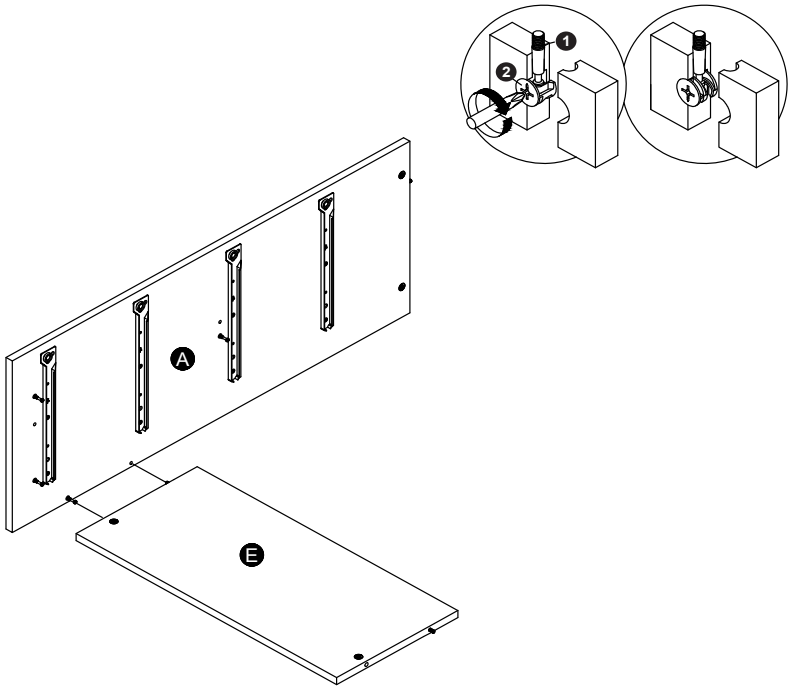

4

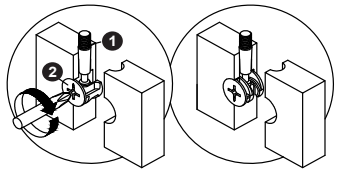

4.1

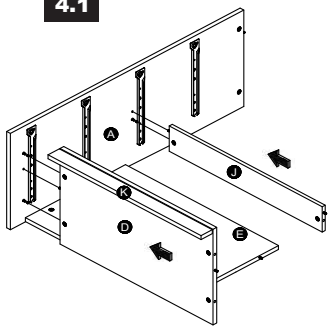

4.2

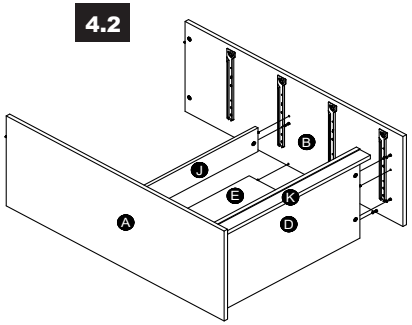

9

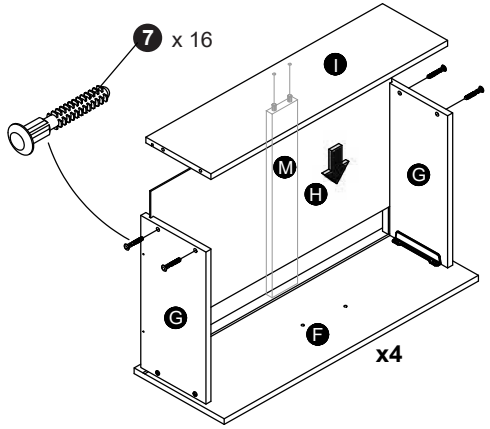

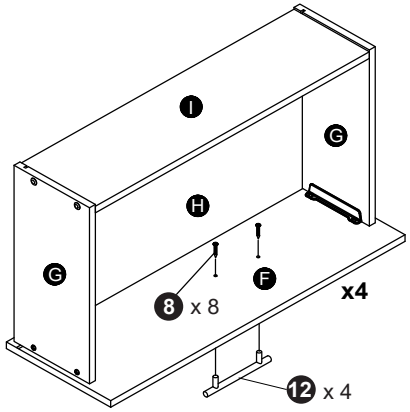

8

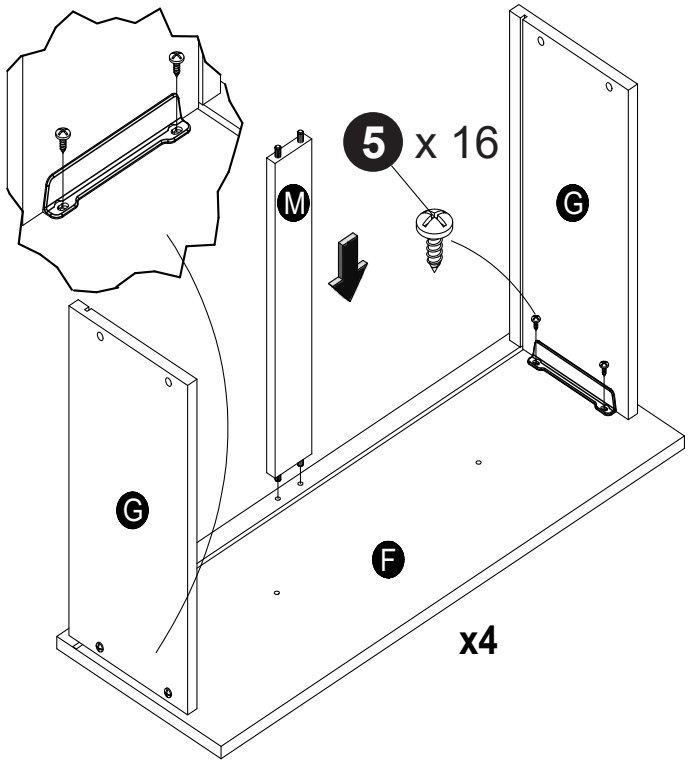

5

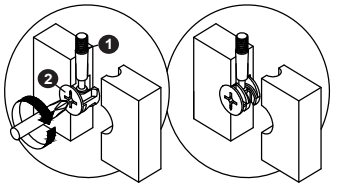

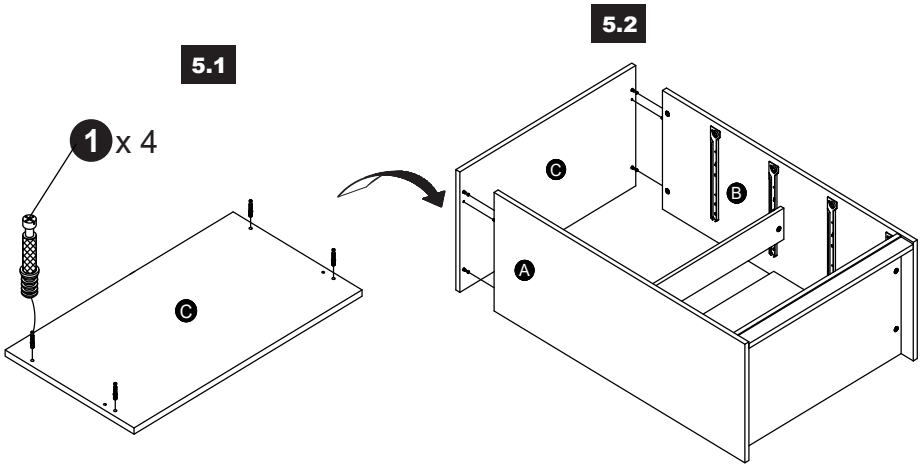

6

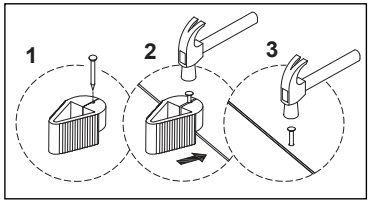

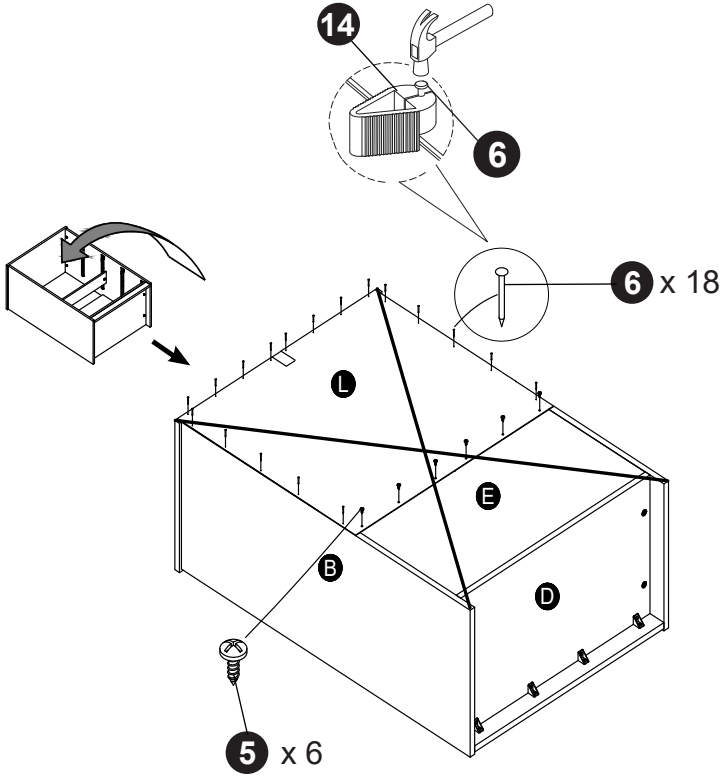

7

