STEP 6

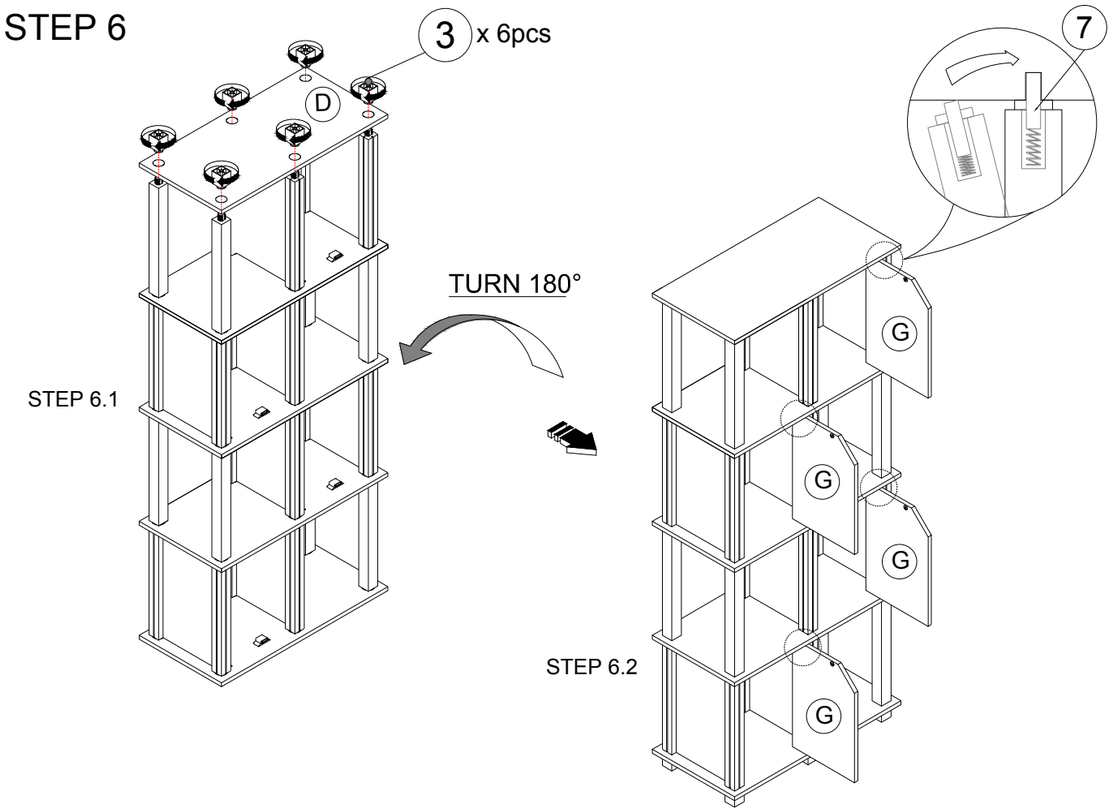

STEP 7

PLEASE FOLLOW BELOW INSTRUCTION
TO PREVENT PRODUCT TIP OVER.

HARDWARE LIST	QTY
WALL PLUG EYELET SCREW CABLE TIE	1 SET

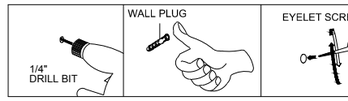

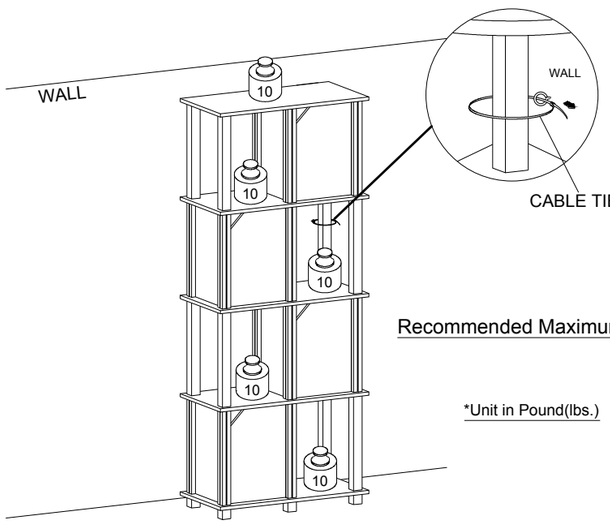

Recommended Maximum Weight

*Unit in Pound(lbs.)

WARNING:

>This unit has been designed to support the maximum loads shown. Exceeding these load limits could cause sagging, instability, product collapse, and/or serious injury.

>DO NOT allow children to climb on unit.

> Put heavier items on lower shelves.

Furinno®
Fits Space. Fits Budget

Assembly Instruction

Furinno Brahms 5-Tier Storage Shelf
With 4 Doors

MODEL : **19211**

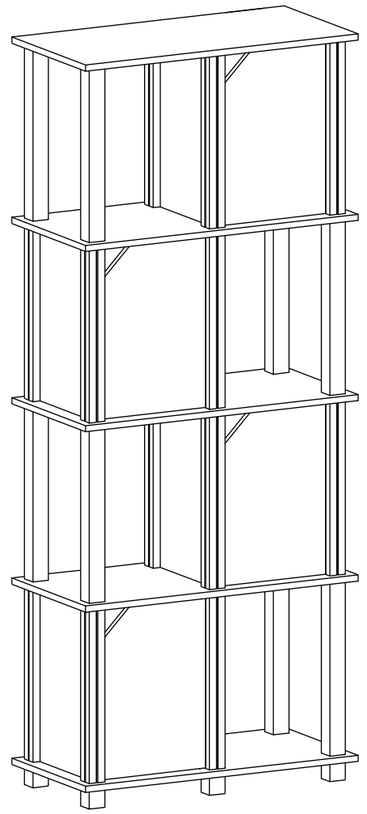

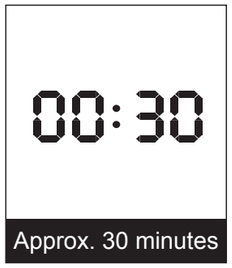

Approx. 30 minutes

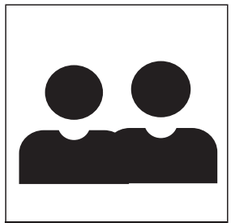

Recomm. 2 Persons

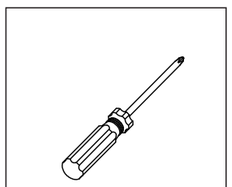

Tools Required

Customer Support

NEED HELP? For replacement requests or product inquiries, please contact our Customer Service Team by emailing us at **support@furinno.com**. Thank you for selecting Furinno!

www.furinno.com

1921120200407

HARDWARE & PARTS LIST

NO	HARDWARE LIST	QTY
1	SQ LONG POLE WITH GROOVE	16pcs
2	SQ LONG POLE	8pcs
3	SQ LEG	6pcs
4	ROUND RING	18pcs
5	MAGNET	4pcs
6	FLAT SCREW	4pcs
7	DOOR SPRING SUPPORT	8pcs
8	WALL MOUNTING SET	1 set

NO	PARTS LIST	QTY
A	TOP PANEL	1pc
B	2ND & 4TH SHELF PANEL	2pcs
C	3RD SHELF PANEL	1pc
D	BOTTOM PANEL	1pc
E	SIDE PANEL	8pcs
F	BACK PANEL	4pcs
G	DOOR PANEL	4pcs

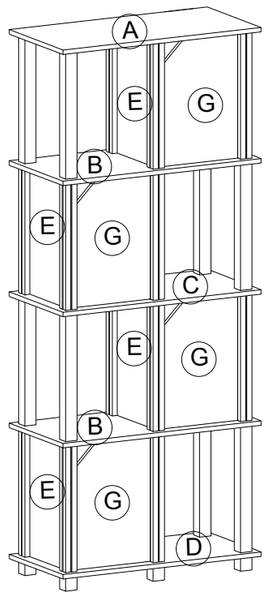

USEFUL HINTS BEFORE YOU START:

1. Read each step carefully before starting.
2. It is important that each step is performed in correct order to avoid difficulties.
3. Identify, sort and count the parts before assembly.
4. Assemble your furniture on packaging cardboard to prevent scratch or damage.
5. Clean the product with mild cleanser using soft damped cloth. Do not use harsh or abrasive cleanser.
6. Using incompatible hardware might cause damage to product.

ASSEMBLY INSTRUCTIONS

BEFORE YOU BEGIN, PLEASE READ ASSEMBLY INSTRUCTION CAREFULLY, FOLLOW THEM STEP BY STEP.

STEP 1

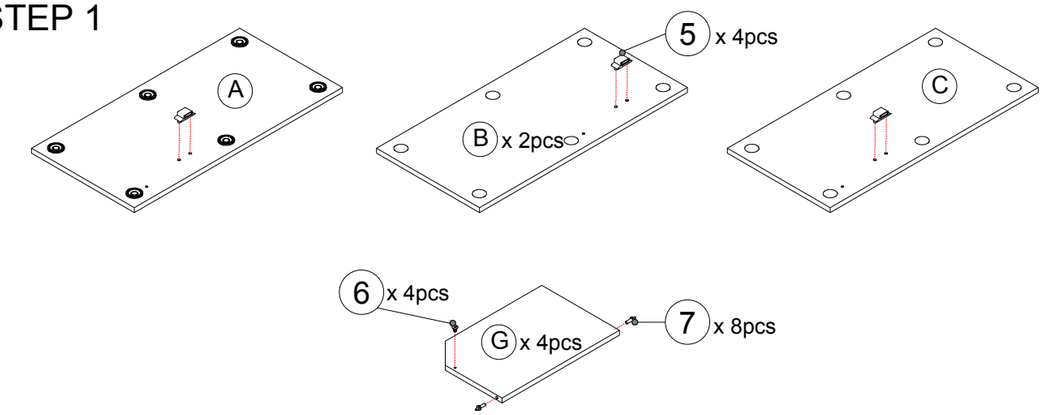

STEP 2

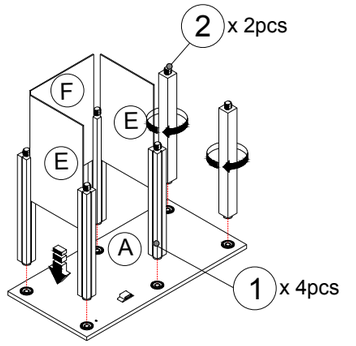

STEP 3

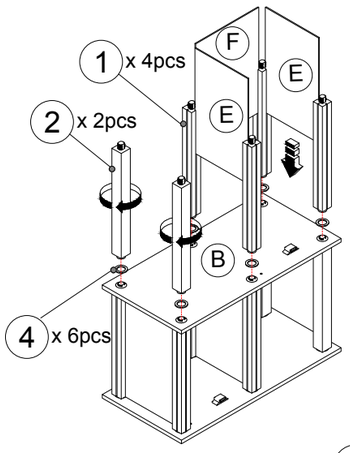

STEP 4

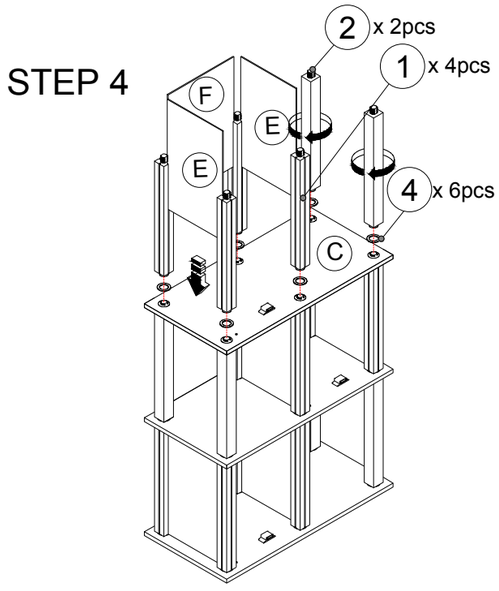

STEP 5

