STEP 5

Upright the unit.
Attach Panel (A) to assembled unit as shown.
Lock Mini Fix Cap (4) using screwdriver.

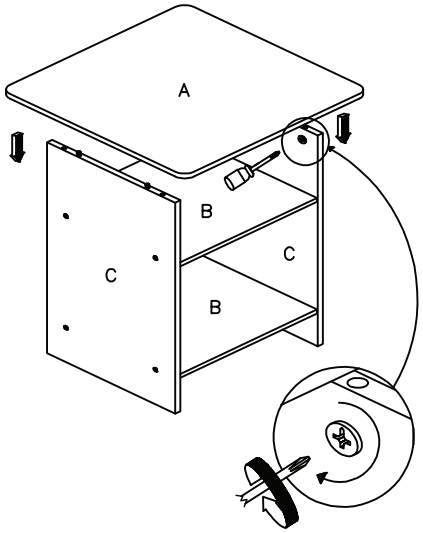

STEP 6

Unfold Bin (6) and slide it into the completed unit.

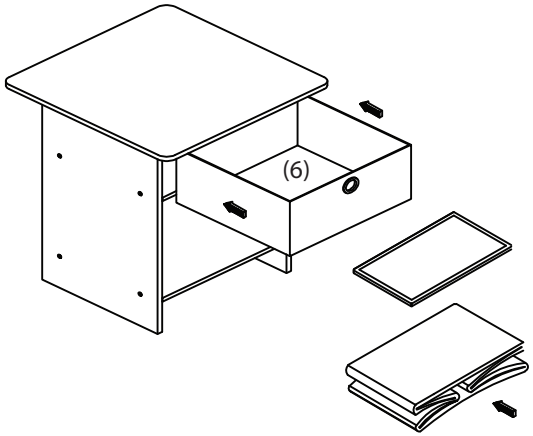

Recommended Maximum Weight

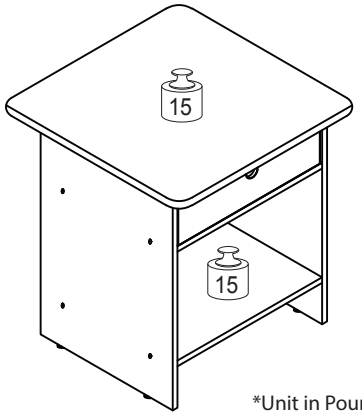

*Unit in Pound(lbs)

WARNING:

>This unit has been designed to support the maximum loads shown. Exceeding these load limits could cause sagging, instability, product collapse, and/or serious injury.

>DO NOT allow children to climb on unit.

>Put heavier items on lower shelves.

Furinno®
Fits Space. Fits Budget

Assembly Instruction

Furinno End Table/ Night Stand
Storage Shelf with Bin Drawer

MODEL : **10004 (Set of 2)**

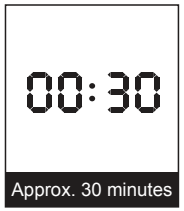

Approx. 30 minutes



Recomm. 1 Person



Tools Required

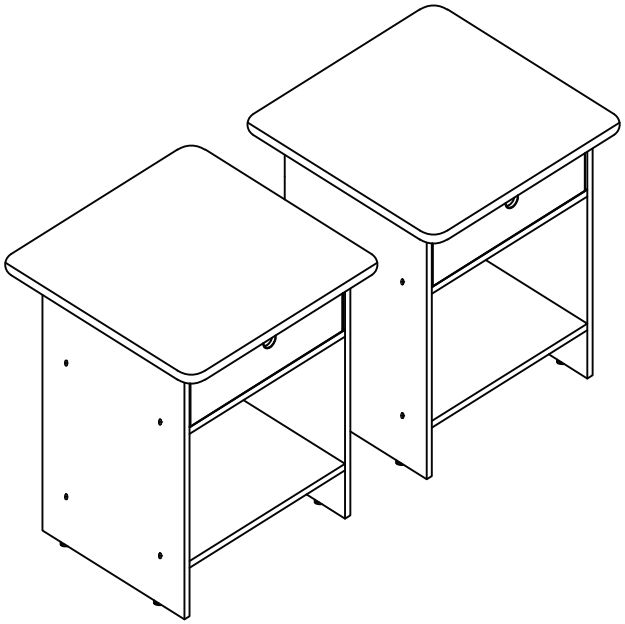

Customer Support

NEED HELP? For replacement requests or product inquiries, please contact our Customer Service Team by emailing us at **support@furinno.com**. Thank you for selecting Furinno!

www.furinno.com

2-1000420180228

No	Hardware List	Qty
1	Chipboard Screw	16pcs
2	Dowel	8pcs
3	Nail Leg	8pcs
4	Mini Fix Cap	8pcs
5	Mini Fix Bolt	8pcs
6	Non-Woven Bin	2pcs

No	Parts List	Qty
A	Top Panel	2pcs
B	Shelf Panel	4pcs
C	Side Panel	4pcs

*All the hardware quantity are for two sets.

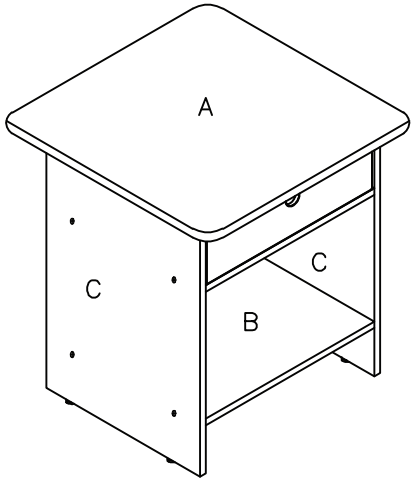

USEFUL HINTS BEFORE YOU START:

1. Read each step carefully before starting.
2. It is important that each step is performed in correct order to avoid difficulties.
3. Identify, sort and count the parts before assembly.
4. Assemble your furniture on packaging cardboard to prevent scratch or damage.
5. Clean the product with mild cleanser using soft damped cloth. Do not use harsh or abrasive cleanser.
6. Using uncompatible hardware might cause damage to product.

STEP 1

Install Mini Fix Bolt (5) on Panel (A) using screwdriver.

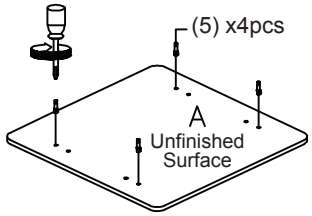

STEP 2

Install Mini Fix Cap (4), Dowel (2) and Nail Leg (3) to Panel (C) as shown.

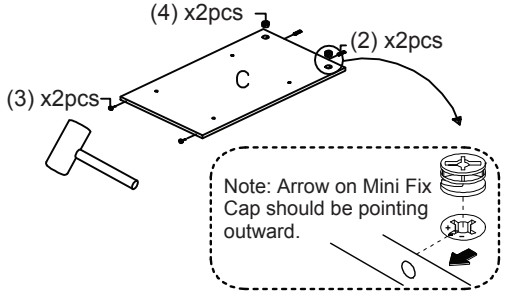

STEP 3

Attach both Panel (B) to left side Panel (C) and tighten with Screw (1) using screwdriver.

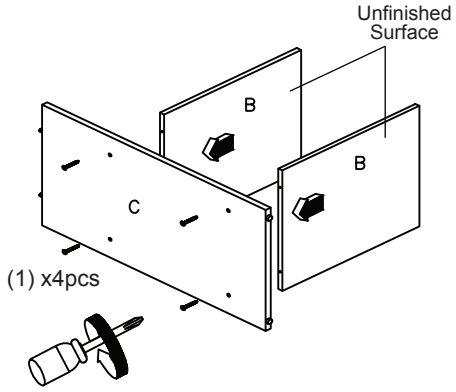

STEP 4

Attach the right side Panel (C) to assemble unit as shown.Tighten with Screw (1) using screwdriver.

