STEP 4

Completed unit.

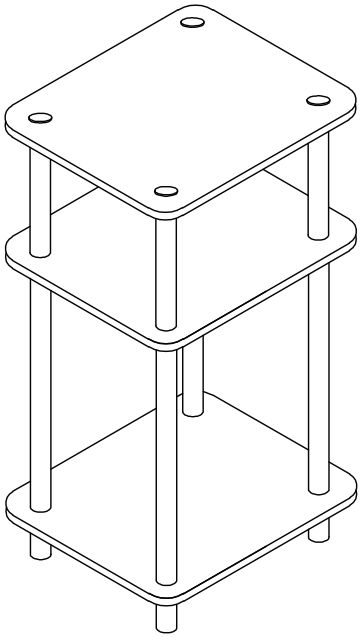

Recommended Maximum Weight

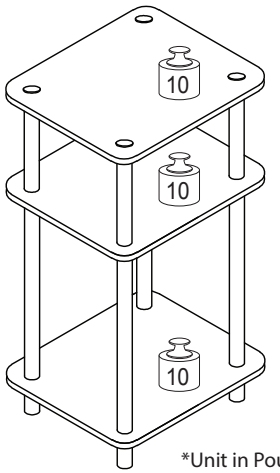

*Unit in Pound(lbs)

WARNING:

>This unit has been designed to support the maximum loads shown. Exceeding these load limits could cause sagging, instability, product collapse, and/or serious injury.

>DO NOT allow children to climb on unit.

>Put heavier items on lower shelves.

Furinno®
Fits Space. Fits Budget

Assembly Instruction

Furinno JUST 3-Tier No Tools Tube Shelf

MODEL : **11087 (Set of 2)**

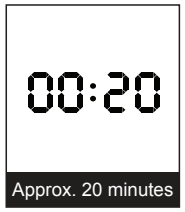





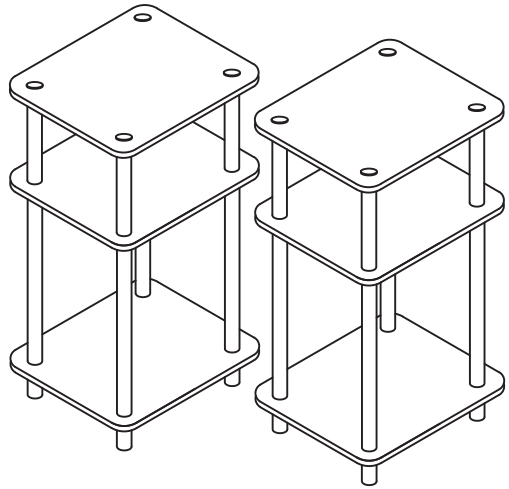

Customer Support

NEED HELP? For replacement requests or product inquiries, please contact our Customer Service Team by emailing us at **support@furinno.com**. Thank you for selecting Furinno!

www.furinno.com

2-1108720190509

No	Hardware List	Qty
1	Long Pole	8pcs
2	Short Pole	8pcs
3	Top Cap	8pcs
4	Round Leg	8pcs

No	Parts List	Qty
A	Shelf Panel	6pcs

*All the hardware quantity are for two sets.

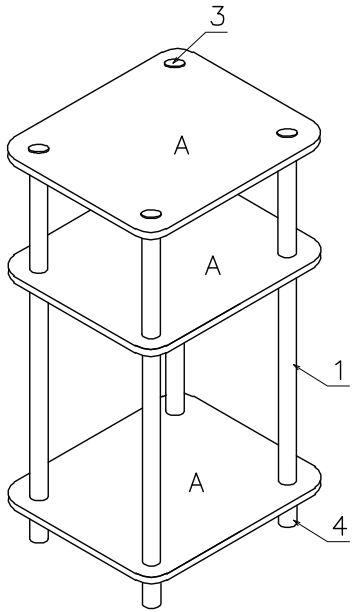

USEFUL HINTS BEFORE YOU START:

1. Read each step carefully before starting.
2. It is important that each step is performed in correct order to avoid difficulties.
3. Identify, sort and count the parts before assembly.
4. Assemble your furniture on packaging cardboard to prevent scratch or damage.
5. Clean the product with mild cleanser using soft damped cloth. Do not use harsh or abrasive cleanser.
6. Using uncompatible hardware might cause damage to product.

STEP 1

Fix Round Leg (4) to bottom Shelf Panel (A).

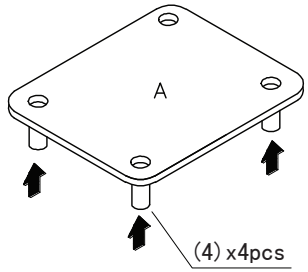

STEP 3

Attach top Shelf Panel (A) and tighten with Top Cap (3).

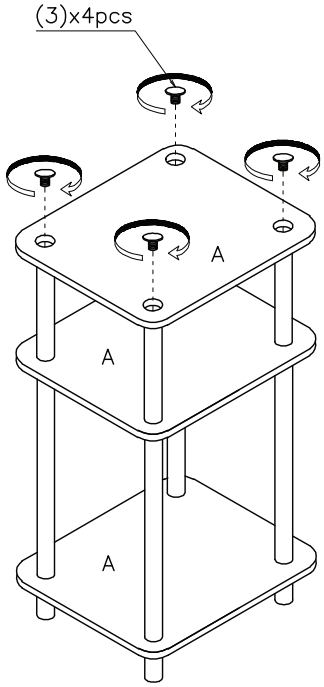

STEP 2

2.1 Tighten Long Pole (1) to Round Leg (4).
2.2 Attach Shelf Panel (A) and tighten Short Pole (2), as shown.

