STEP 4

Attach Panel (B) to assembled unit and tighten it with Screw (6) using screwdriver.

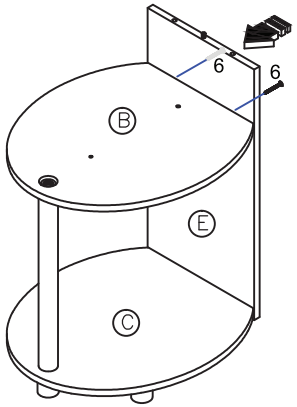

STEP 5

Attach Top Cap (3) to Panel (B) and tighten it with Long Round Pole (2).

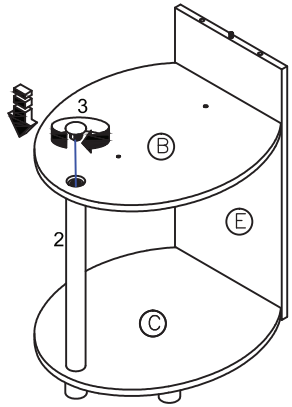

STEP 6

Attach Panel (D) to Panel (B) with Dowel (7) and Screw (6), as shown.

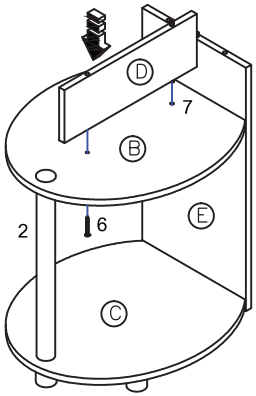

STEP 7

Attach Panel (A) to assembled unit with Mini Fix Bolt/ Cam (1A&1B). Lock Mini Fix Cam (1B) using screwdriver.

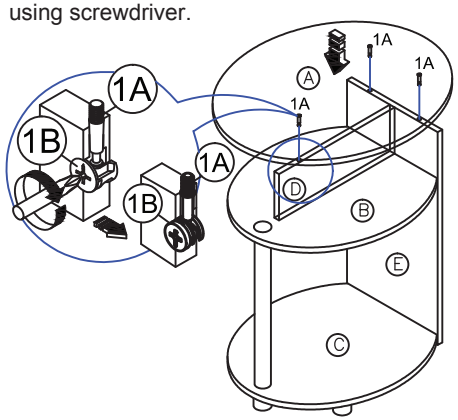

Recommended Maximum Weight

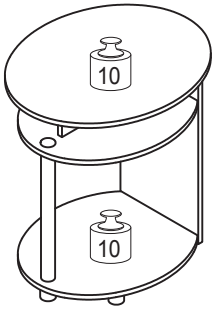

*Unit in Pound(lbs)

WARNING:

>This unit has been designed to support the maximum loads shown. Exceeding these load limits could cause sagging, instability, product collapse, and/or serious injury.

>DO NOT allow children to climb on unit.

>Put heavier items on lower shelves.

Furinno®

Fits Space. Fits Budget

Assembly Instruction

Furinno JAYA Simple Design Oval End Table (Set of Two)

MODEL : **2-15080**

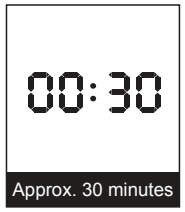

Approx. 30 minutes



Recomm. 1 Person



Tools Required

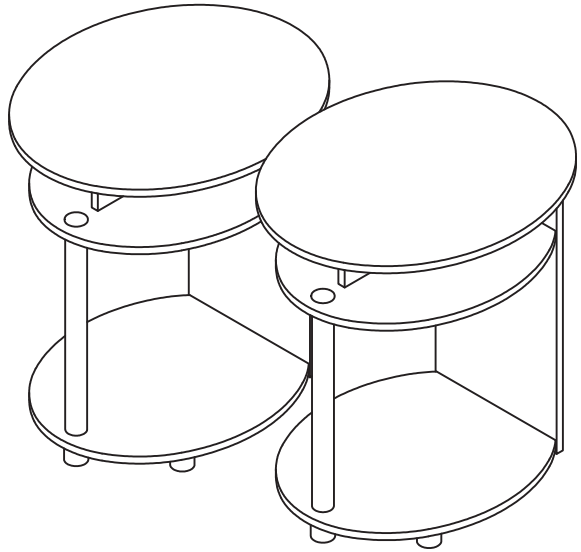

Customer Support

NEED HELP? For replacement requests or product inquiries, please contact our Customer Service Team by emailing us at **support@furinno.com**. Thank you for selecting Furinno!

www.furinno.com

2-1508020180329

No	Hardware List	Qty
1	Mini Fix Bolt& Cam 1A 1B	6pcs
2	Long Round Pole	2pcs
3	Top Cap	2pcs
4	Round Leg	2pcs
5	Plug Round Leg	4pcs
6	C/B Screw	10pcs
7	Dowel	10pcs

No	Parts List	Qty
A	Top Panel	2pcs
B	Shelf Panel	2pcs
C	Bottom Panel	2pcs
D	Center Panel	2pcs
E	Back Panel	2pcs

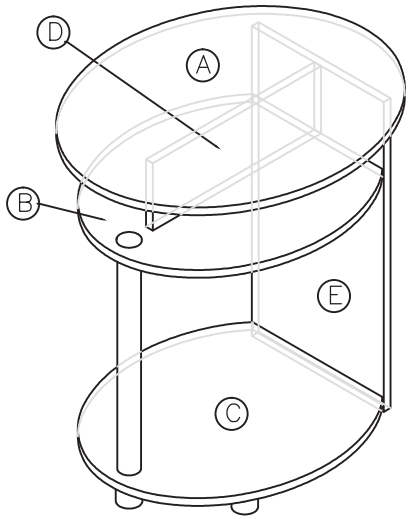

USEFUL HINTS BEFORE YOU START:

1. Read each step carefully before starting.
2. It is important that each step is performed in correct order to avoid difficulties.
3. Identify, sort and count the parts before assembly.
4. Assemble your furniture on packaging cardboard to prevent scratch or damage.
5. Clean the product with mild cleanser using soft damped cloth. Do not use harsh or abrasive cleanser.
6. Using uncompatible hardware might cause damage to product.

STEP 1

1.1 Screw Mini Fix Bolt (1A) into pre-drill hole on Panel (A) using screw driver.
1.2 Insert Dowel (7) to Panel (B)(C)(D)&(E) using hammer.
1.3 Attach Plug Round Leg (5) into pre-drill hole on Panel (C).
1.4 Insert Mini Fix Cam (1B) to Panel (D&E) as shown.

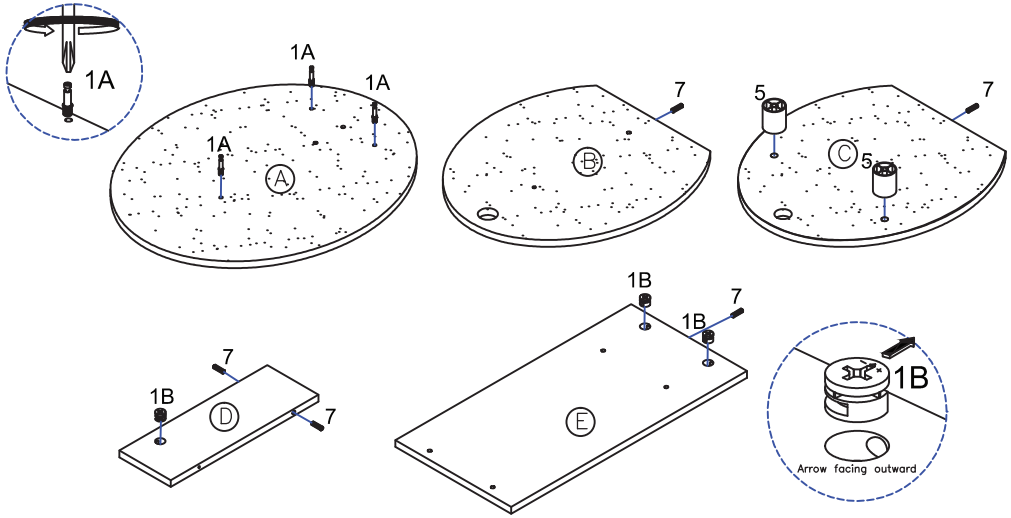

STEP 2

Attach Long Round Pole (2) to Panel (C) and tighten it with Round Leg (4) as shown.

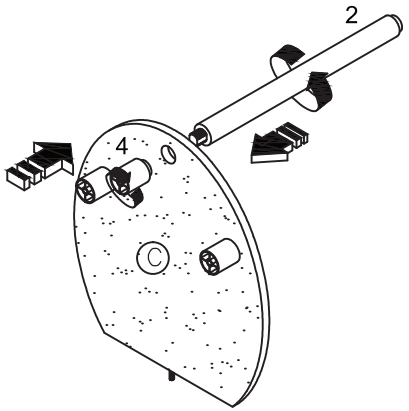

STEP 3

Attach Panel (E) to Panel (C) and tighten it with Screw (6) using screwdriver.

