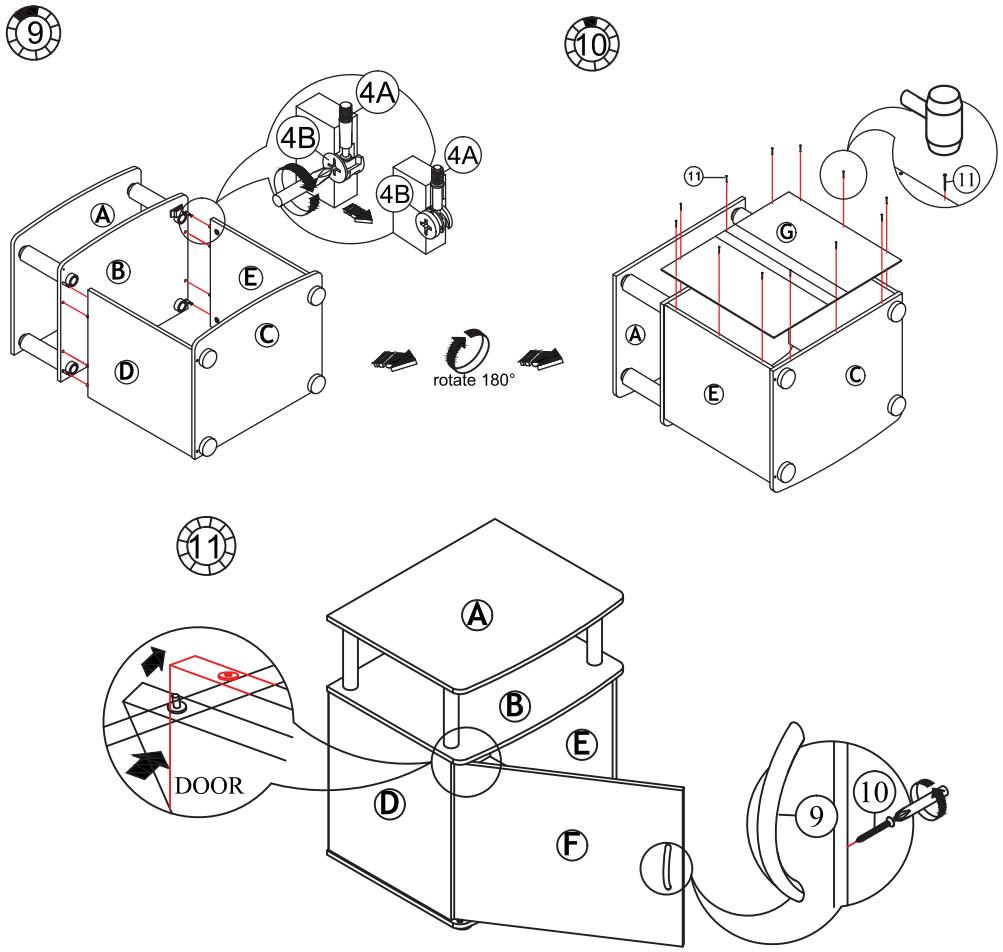

Recommended Maximum Weight

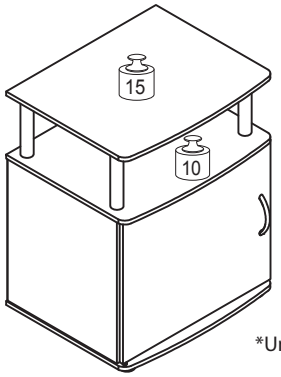

*Unit in Pound(lbs)

WARNING:

>This unit has been designed to support the maximum loads shown. Exceeding these load limits could cause sagging, instability, product collapse, and/or serious injury.

>DO NOT allow children to climb on unit.

>Put heavier items on lower shelves.

Furinno®
Fits Space. Fits Budget

Assembly Instruction

Furinno JAYA Utility Design End Table
(Set of Two)

MODEL : **2-15114**

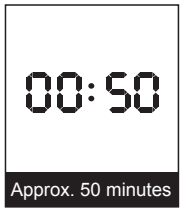

Approx. 50 minutes



Recomm. 2 Person



Tools Required

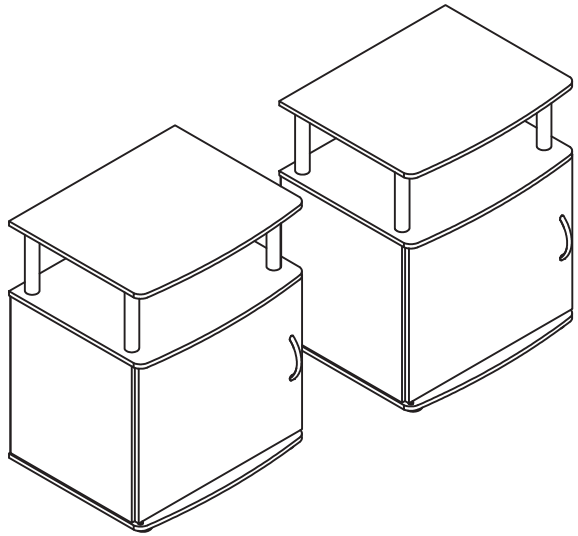

Customer Support

NEED HELP? For replacement requests or product inquiries, please contact our Customer Service Team by emailing us at **support@furinno.com**. Thank you for selecting Furinno!

www.furinno.com

2-1511420180709

No	Parts List	Qty
A	TOP PANEL	2pcs
B	CENTER PANER	2pcs
C	BOTTOM PANEL	2pcs
D	LEFT SIDE PANEL	2pcs
E	RIGHT SIDE PANEL	2pcs
F	DOOR PANEL	2pcs
G	BACK PANEL	2pcs

No	Hardware List	Qty
1	SHORT ROUND POLE	8pcs
2	MINI ROUND LEG	8pcs
3	PVC LEG WITH PLUG	8pcs
4	MINI FIX + HOUSING 4A 4B	8sets
5	DOWEL	16pcs
6	C/B SCREW	8pcs
7	MAGNET 7A 7B	2set
8	DOOR SPRING SUPPORT	4pcs
9	HANDLE	2pcs
10	PH TAPPING SCREW	4pcs
11	POWER PIN	24pcs
12	PVC ROUND RING	8pcs

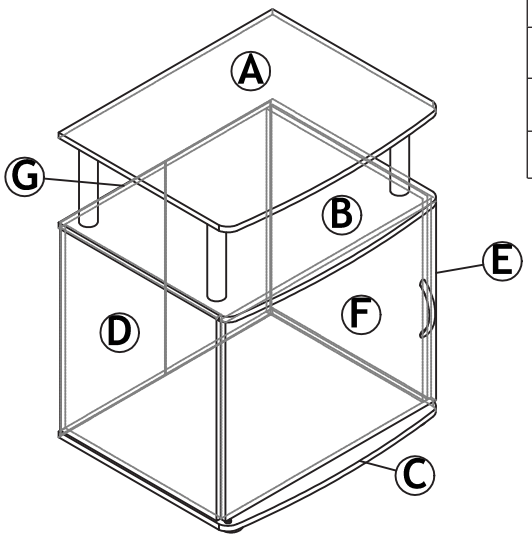

USEFUL HINTS BEFORE YOU START:

1. Read each step carefully before starting.
2. It is important that each step is performed in correct order to avoid difficulties.
3. Identify, sort and count the parts before assembly.
4. Assemble your furniture on packaging cardboard to prevent scratch or damage.
5. Clean the product with mild cleanser using soft damped cloth. Do not use harsh or abrasive cleanser.
6. Using uncompatible hardware might cause damage to product.

