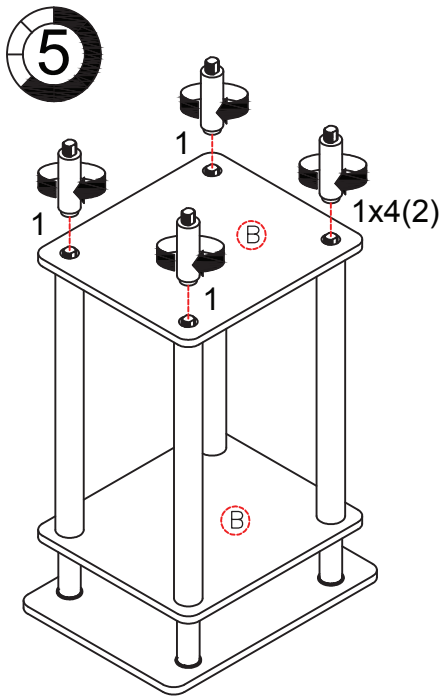

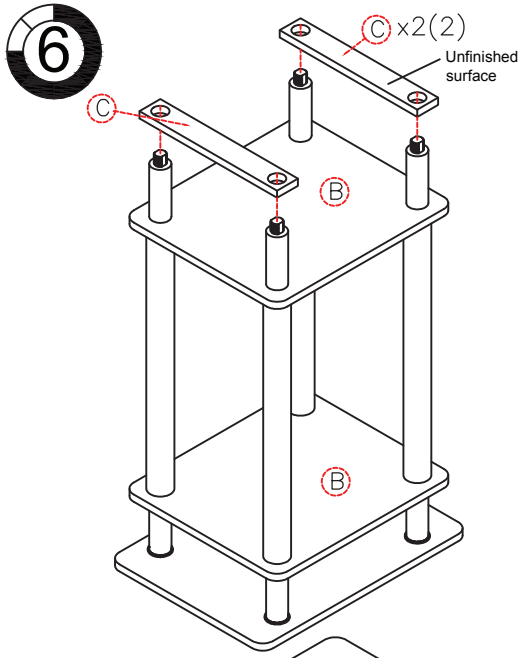

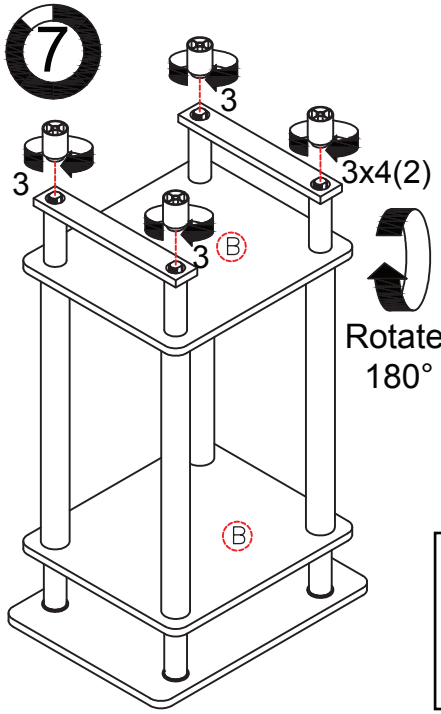

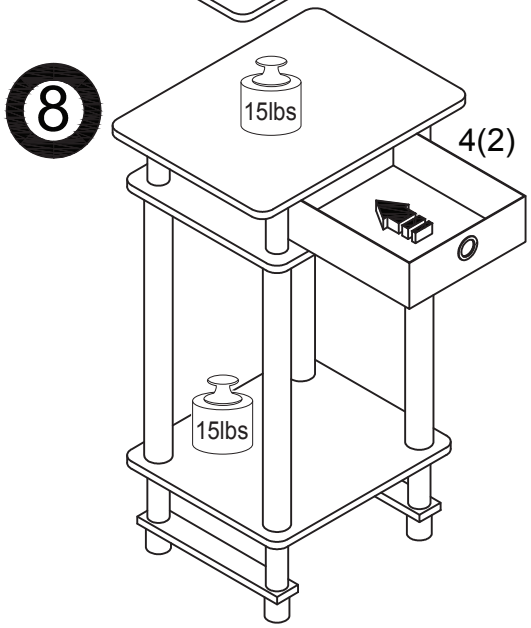

WARNING:

>This unit has been designed to support the maximum loads shown. Exceeding these load limits could cause sagging, instability, product collapse, or serious injury.

>DO NOT allow children to climb on unit.

Furinno®

Fits Space. Fits Budget

Assembly Instruction

Furinno Turn-N-Tube Tall End Table

MODEL : **2-17017**

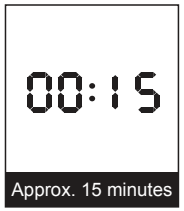





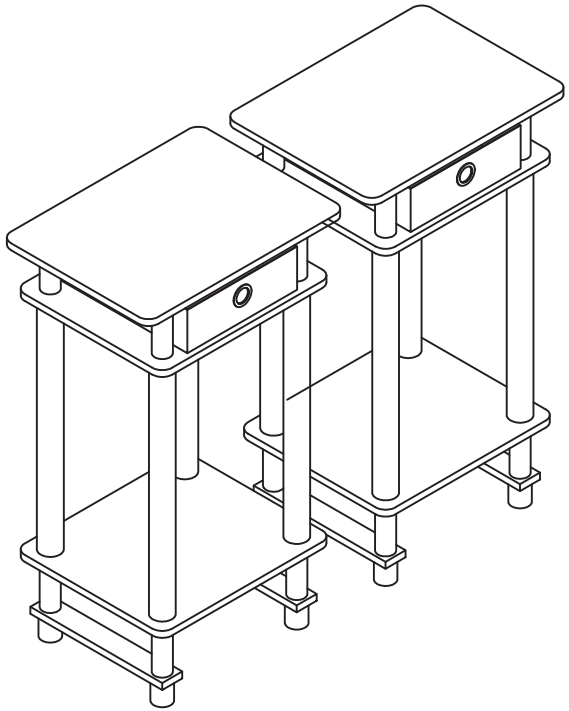

Customer Support

NEED HELP? For replacement requests or product inquiries, please contact our Customer Service Team by emailing us at **support@furinno.com**. Thank you for selecting Furinno!

www.furinno.com

No	Hardware List	Qty
1	Extra Short Pole	16pcs
2	Extra Long Pole	8pcs
3	Round Leg	8pcs
4	Non Woven Bin	2pcs

No	Parts List	Qty
A	Top Panel	2pcs
B	Shelf / Bottom Panel	4pcs
C	Apron Panel	4pcs

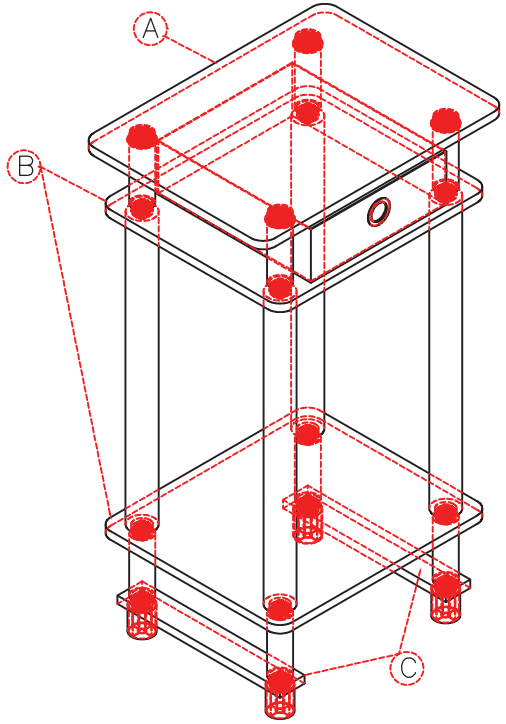

USEFUL HINTS BEFORE YOU START:

1. Read each step carefully before starting.
2. It is important that each step is performed in correct order to avoid difficulties.
3. Identify, sort and count the parts before assembly.
4. Assemble your furniture on packaging cardboard to prevent scratch or damage.
5. Clean the product with mild cleanser using soft damped cloth. Do not use harsh or abrasive cleanser.
6. Using uncompatible hardware might cause damage to product.

