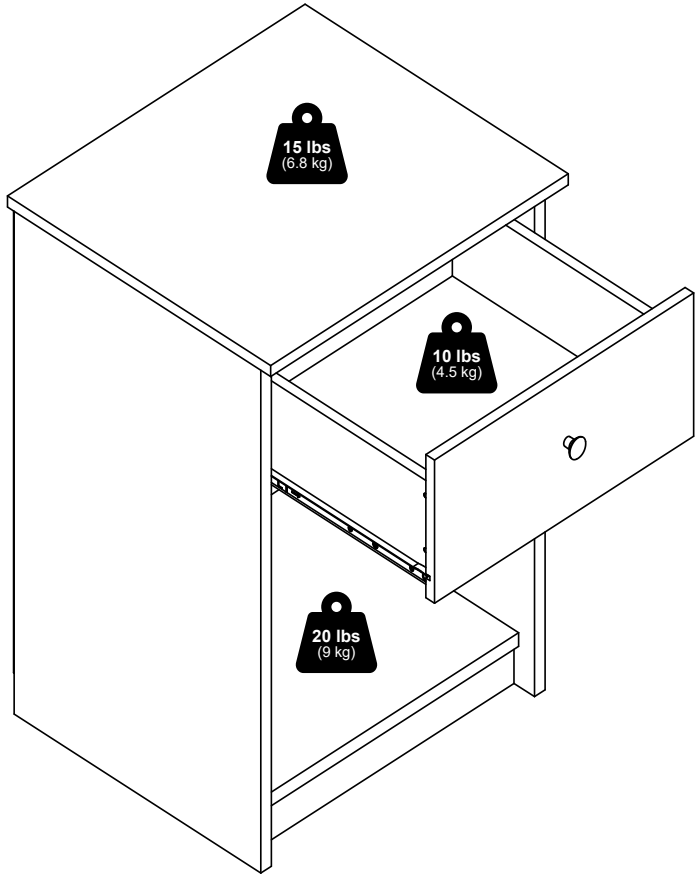

Furinno®

Fits Space, Fits Budget





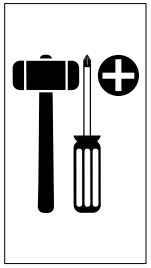

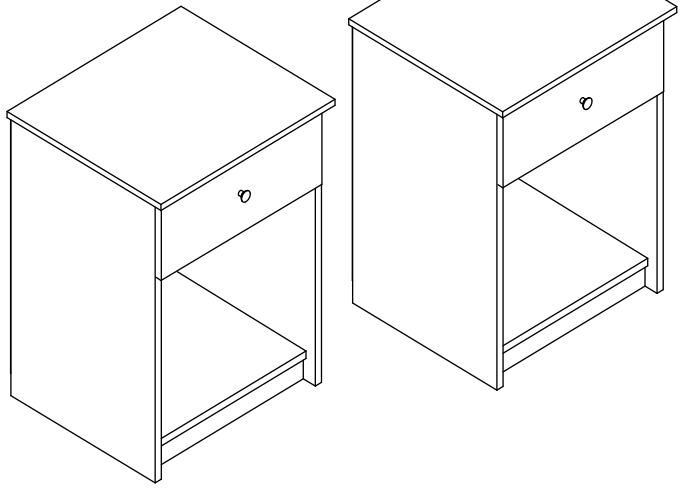

MODEL: 2-19153

support@furinno.com

www.furinno.com

2-1915320230601

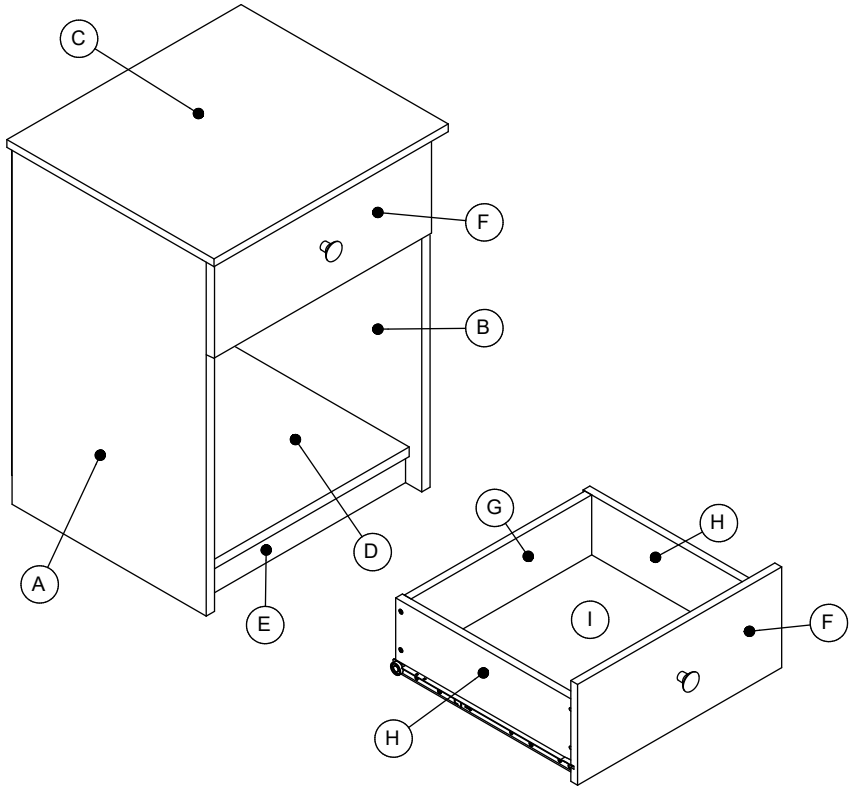

1 x 2 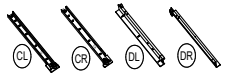	2 x 16  15mm	3 x 16 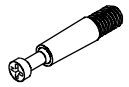 M6 x 31mm	4 x 4  17 x 22mm
5 x 24  M4 x14mm	6 x 24  M3.5 x 12mm	7 x 8 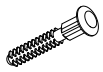	8 x 4 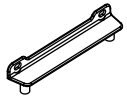 96mm
9 x 40 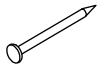 2.5 x 18mm	10 x 2  M4 x 19mm	11 x 2  209mm	12 x 1 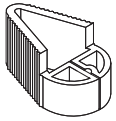

9

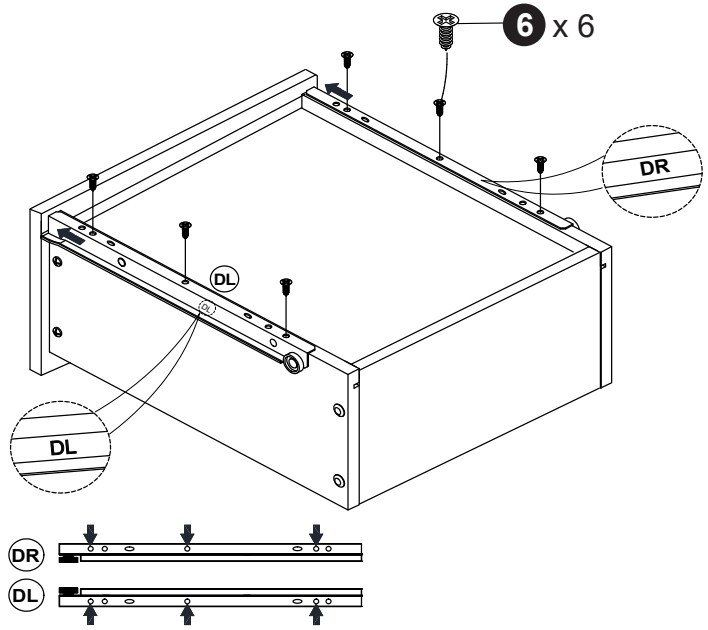

10

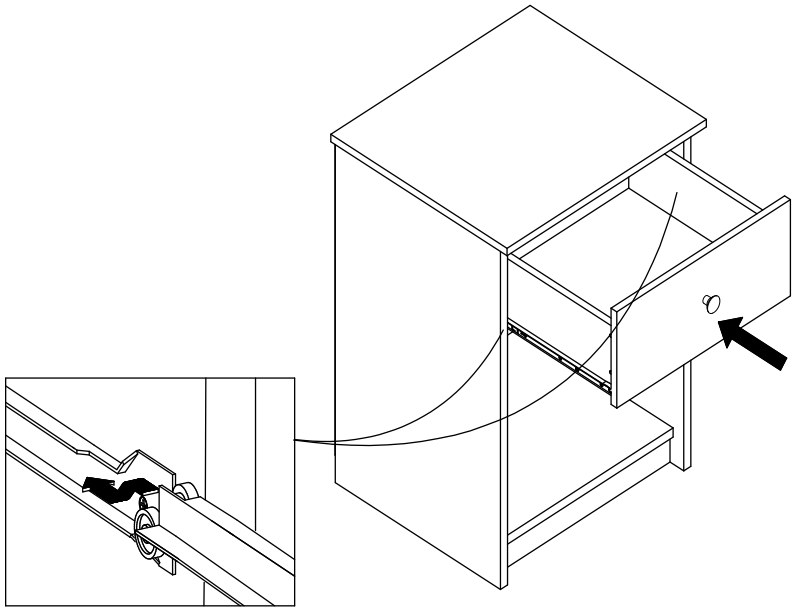

7

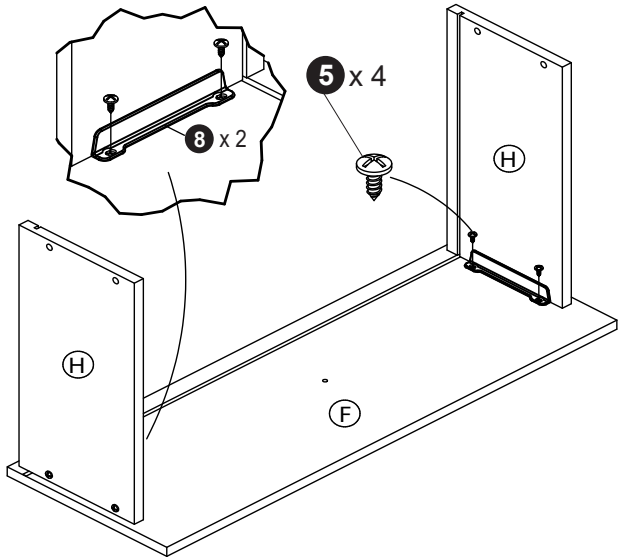
8 x 2
5 x 4
H
H
F

8

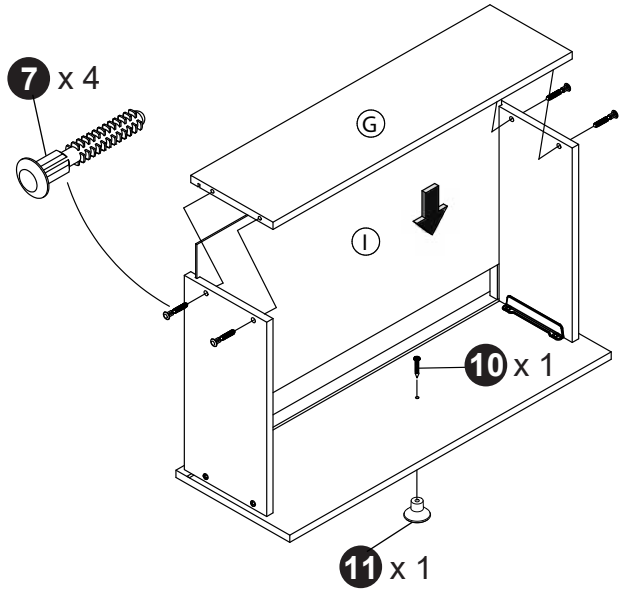
7 x 4
G
I
10 x 1
11 x 1

1

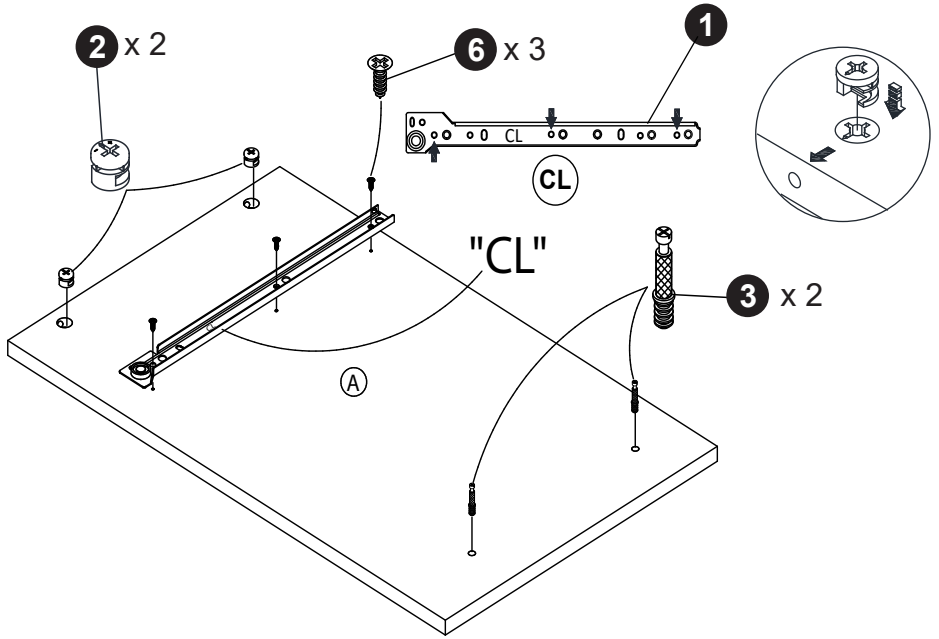
2 x 2
6 x 3
1
CL
CL
"CL"
3 x 2
A

2

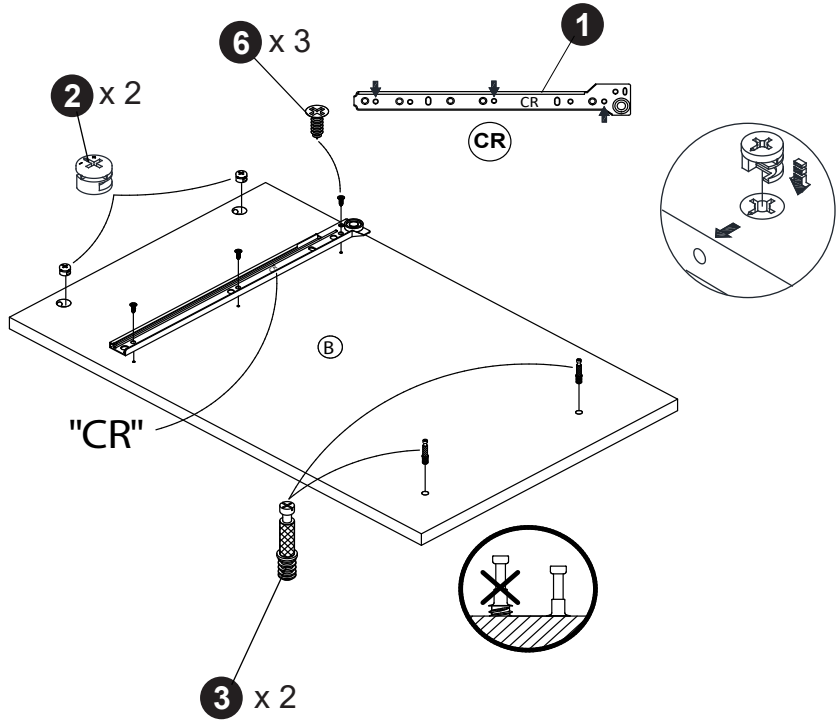
6 x 3
1
2 x 2
CR
CR
B
"CR"
3 x 2

3

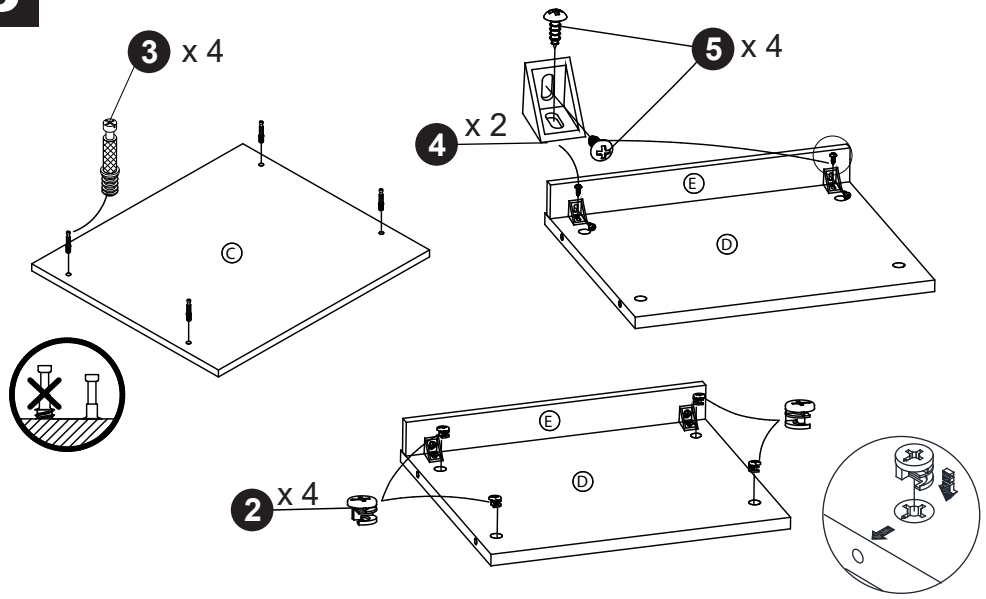

4

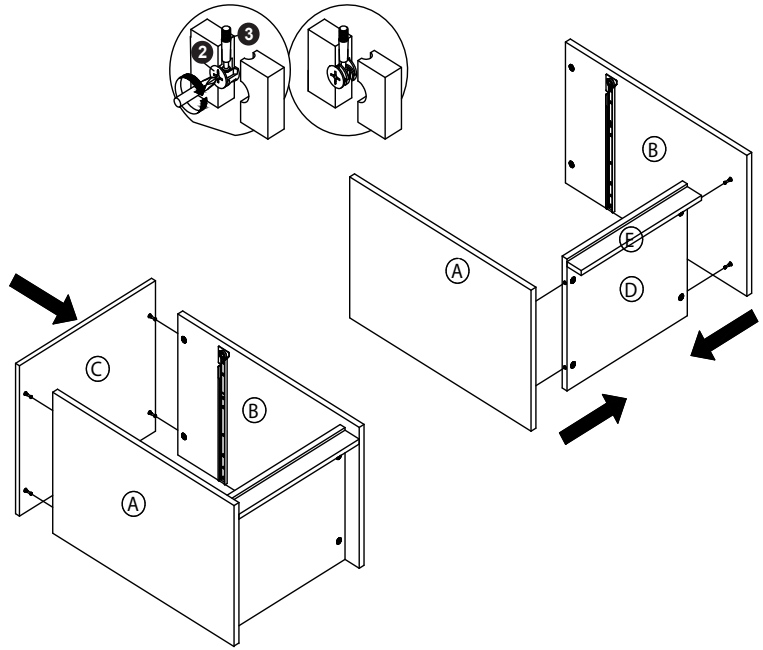

5

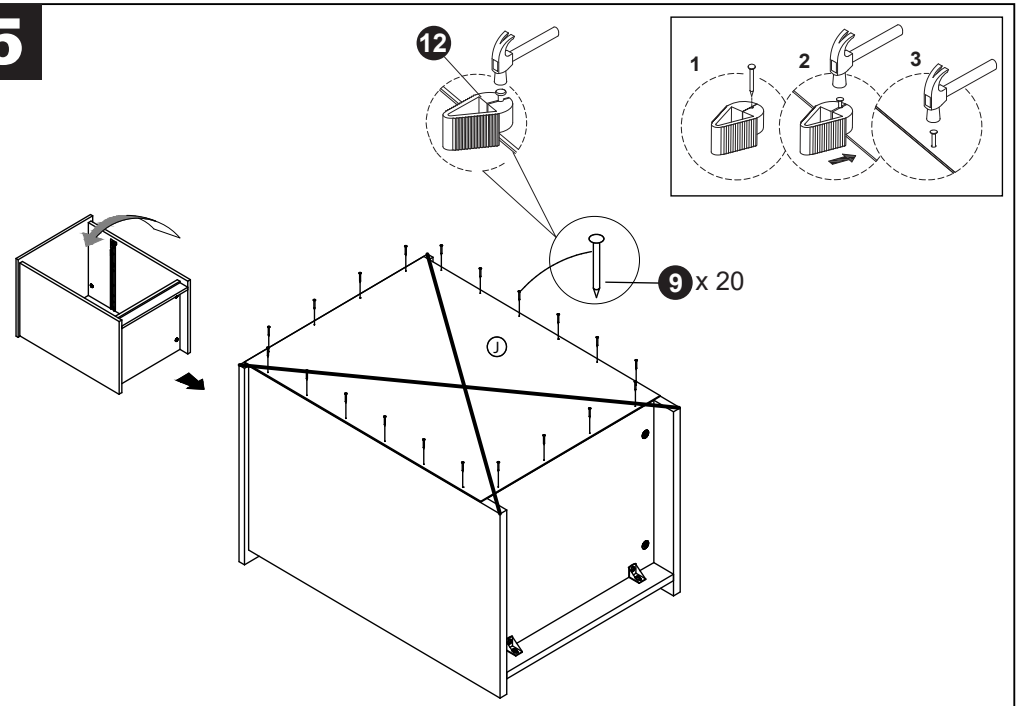

6

