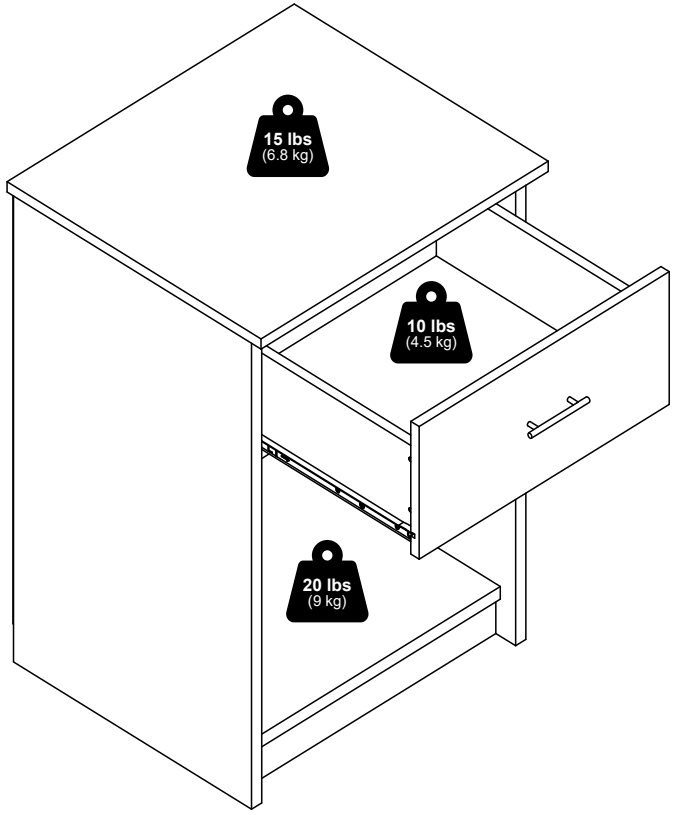

Furinno®

Fits Space, Fits Budget

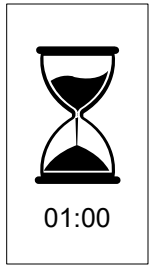



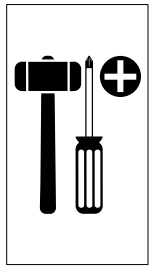

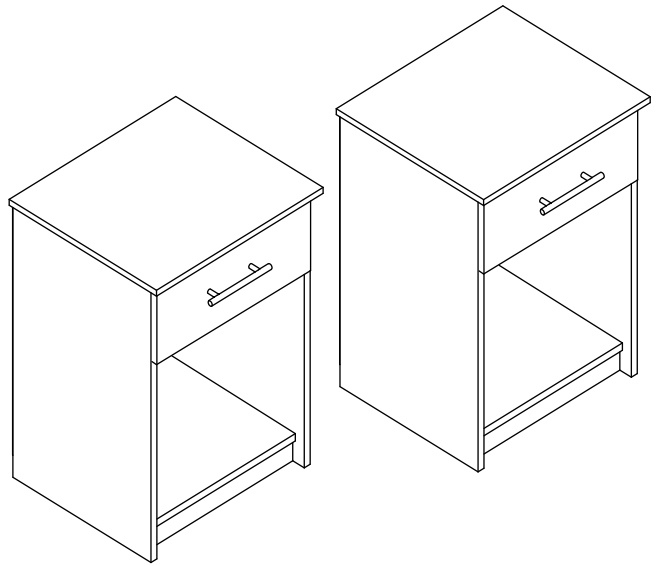

MODEL: 2-19153H

support@furinno.com

www.furinno.com

2-19153H20230601

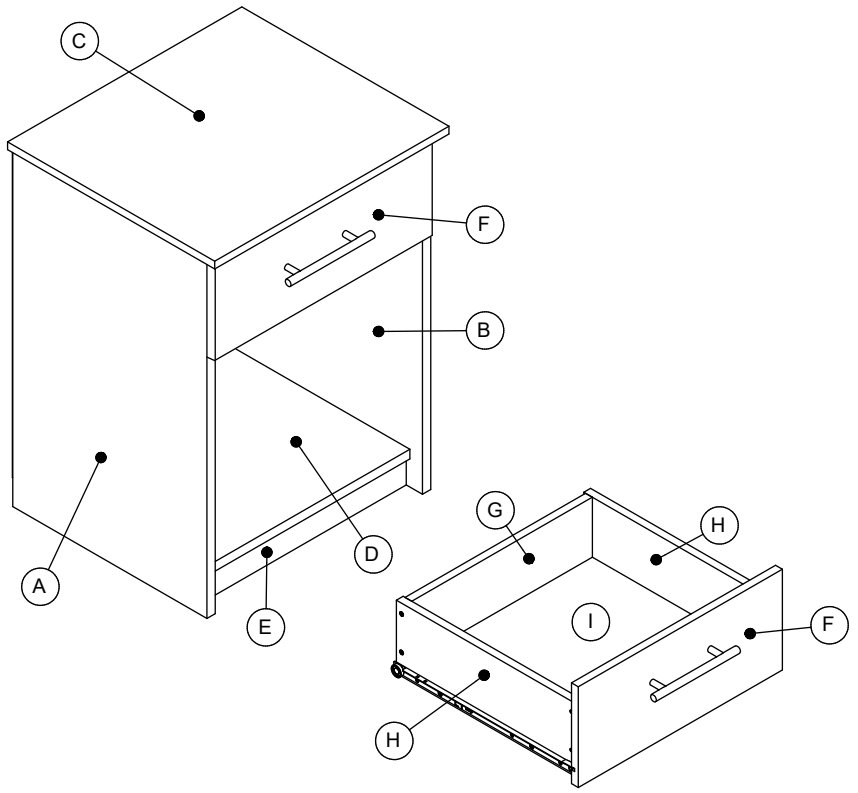

1 x 2 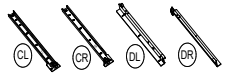	2 x 16  15mm	3 x 16 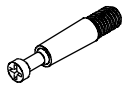 M6 x 31mm	4 x 4  17 x 22mm
5 x 24  M4 x 14mm	6 x 24  M3.5 x 12mm	7 x 8 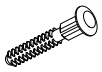	8 x 4 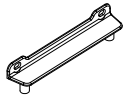 96mm
9 x 40 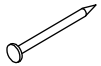 2.5 x 18mm	10 x 4  M4 x 19mm	11 x 2 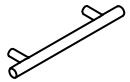	12 x 1 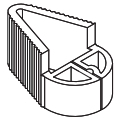

9

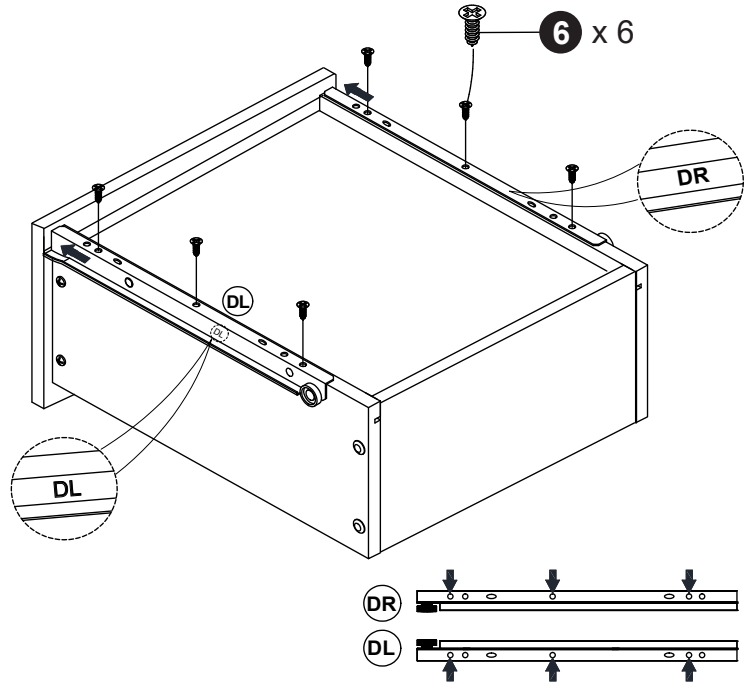

10

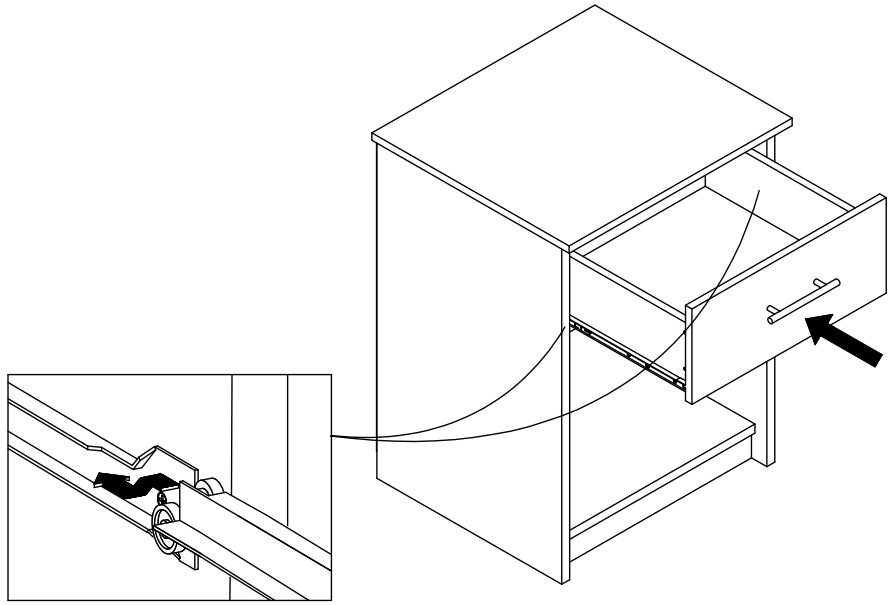

7

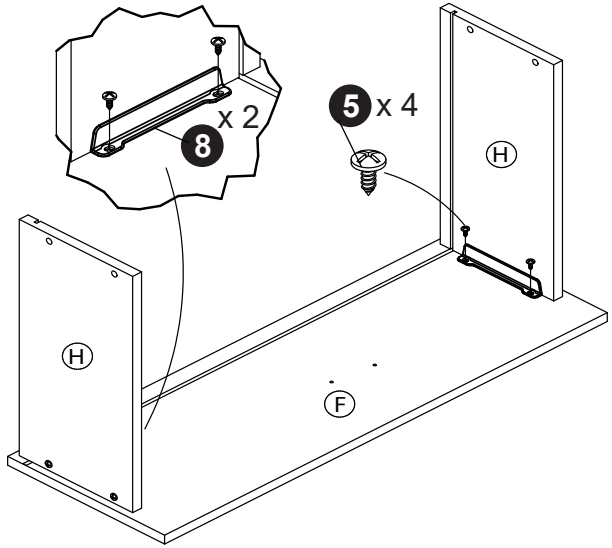
8 x 2
5 x 4
H
H
F

8

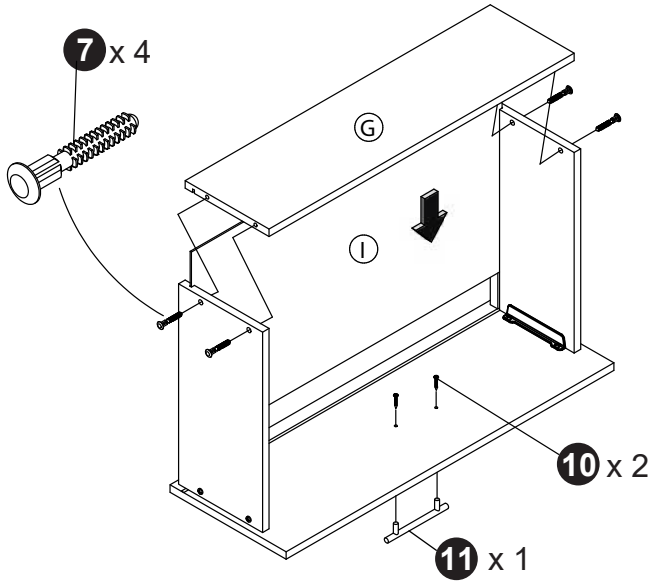
7 x 4
G
I
10 x 2
11 x 1

1

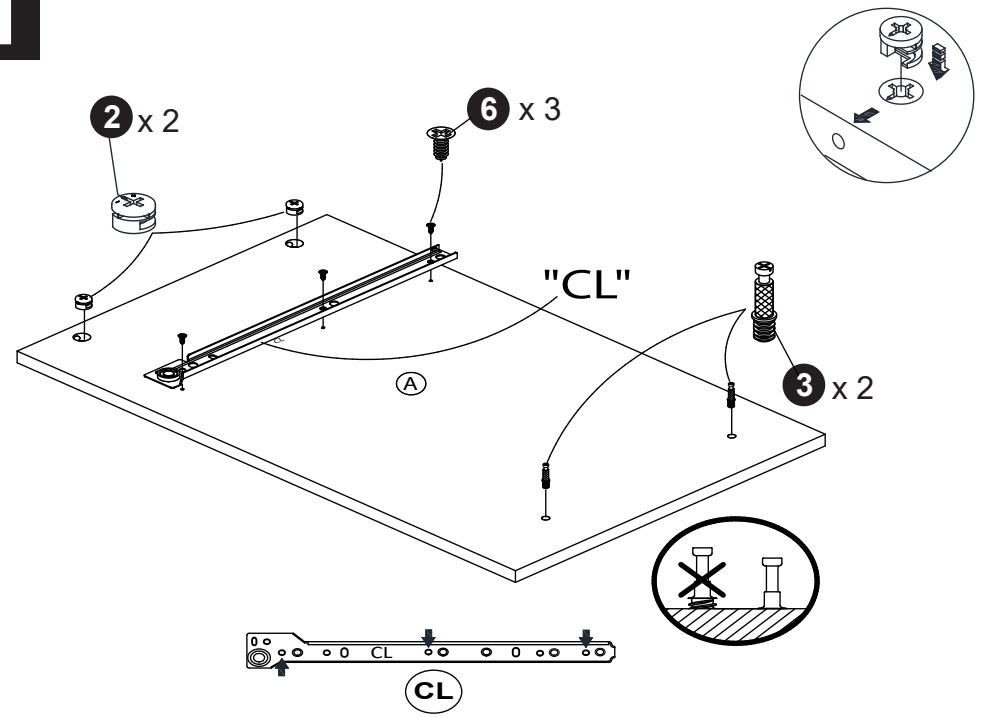
2 x 2
6 x 3
"CL"
A
3 x 2
CL
CL

2

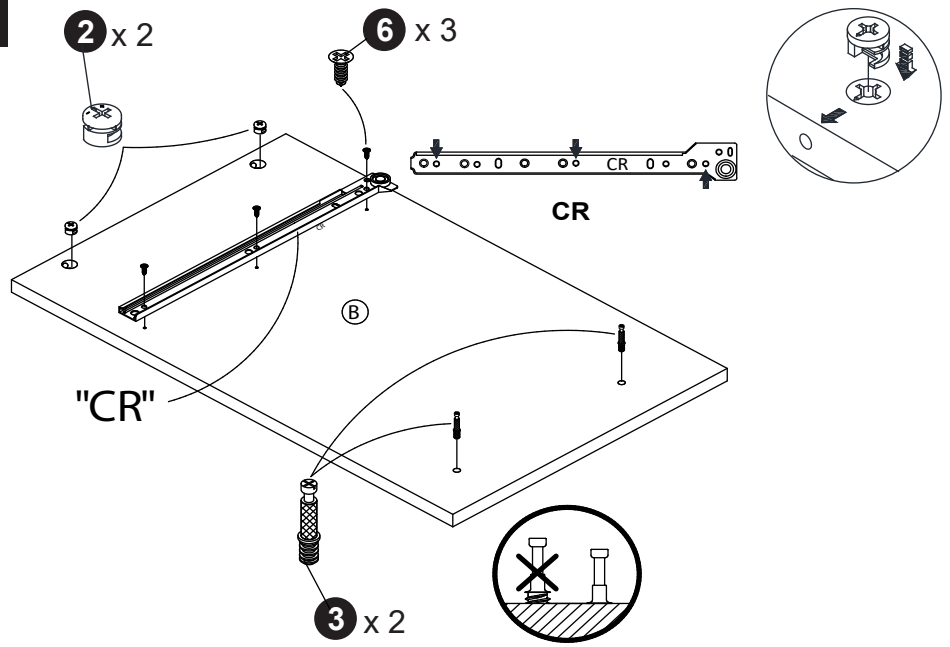
2 x 2
6 x 3
CR
CR
B
"CR"
3 x 2

3

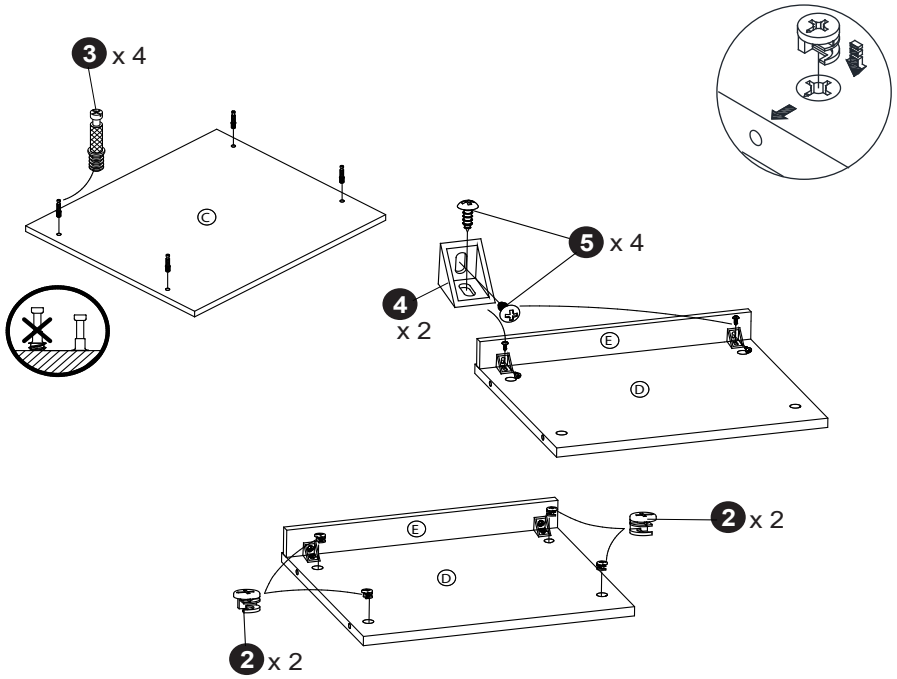
3 x 4
Ⓒ
5 x 4
4 x 2
Ⓔ
Ⓓ
2 x 2
Ⓔ
Ⓓ
2 x 2

4

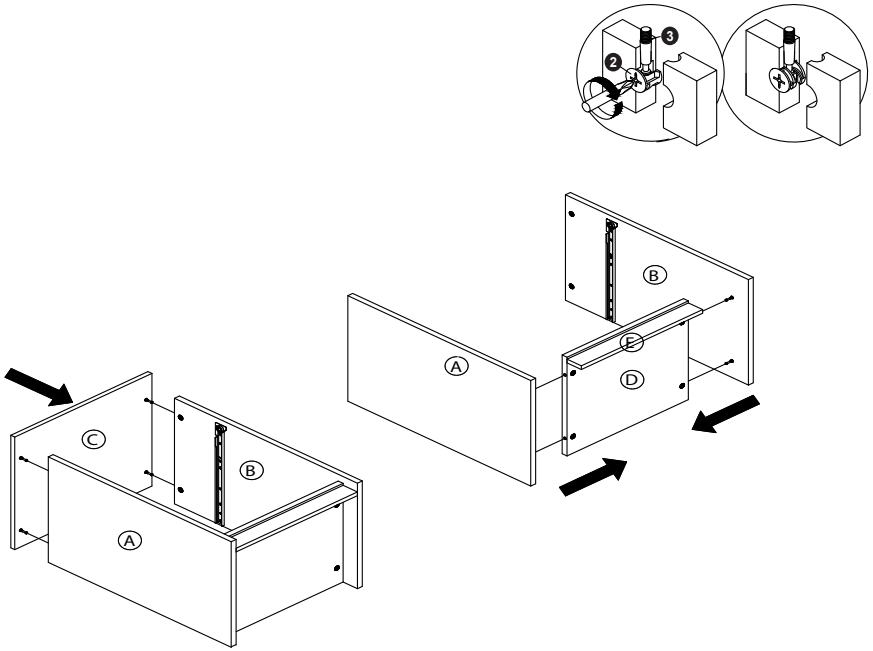
2
3
Ⓑ
Ⓐ
Ⓔ
Ⓓ
Ⓒ
Ⓑ
Ⓐ

5

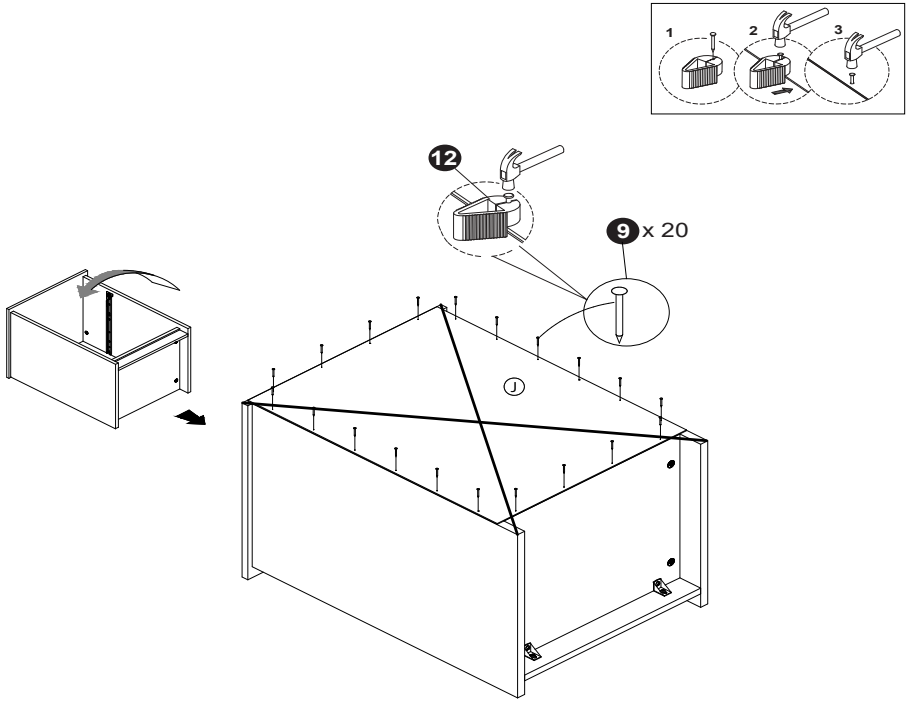
1
2
3
12
9 x 20
Ⓙ

6

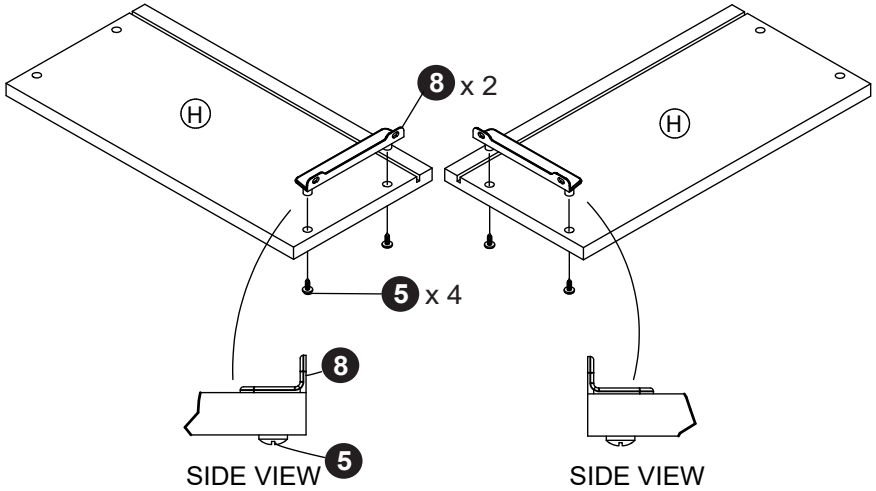
Ⓗ
8 x 2
Ⓗ
5 x 4
8
5
SIDE VIEW
SIDE VIEW