STEP 5

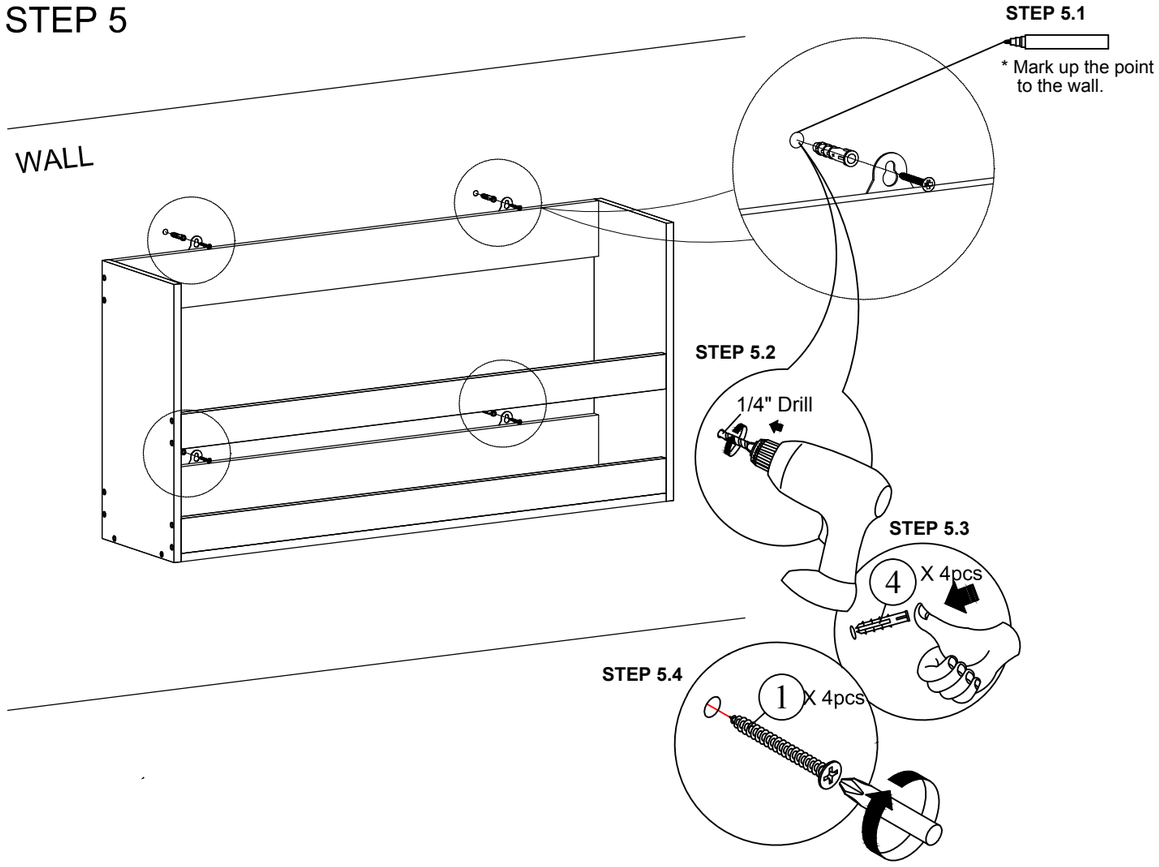

Recommended Maximum Weight

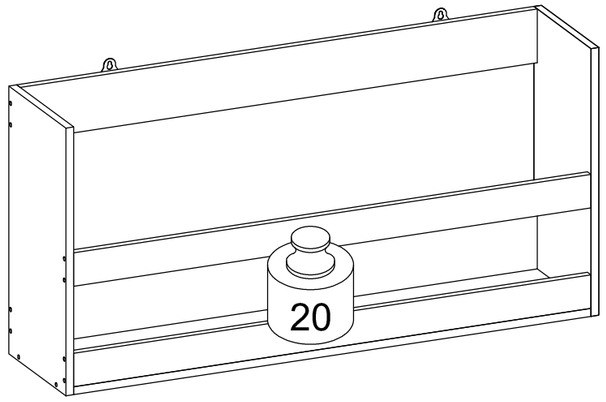

*Unit in Pound(lbs.)

WARNING:

>This unit has been designed to support the maximum loads shown. Exceeding these load limits could cause sagging, instability, product collapse, and/or serious injury.

Furinno®

Fits Space, Fits Budget

Assembly Instruction

Furinno Wall Mounted Storage Shelf

MODEL : **20117**

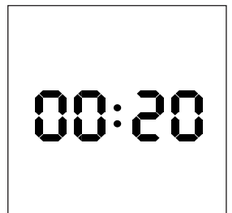

Approx. 20 minutes



Recomm. 2 Persons

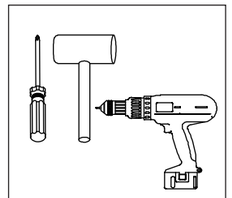

Tool Required

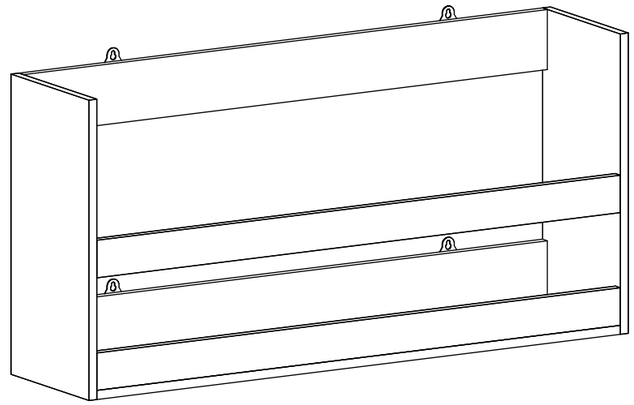

Customer Support

NEED HELP? For replacement requests or product inquiries, please contact our Customer Service Team by emailing us at **support@furinno.com**. Thank you for selecting Furinno!

www.furinno.com

2011720220103

HARDWARE & PARTS LIST

NO	HARDWARE LIST	QTY
1	LONG SCREW	28pcs
2	SHORT SCREW	8pcs
3	WALL BRACKET	4pcs
4	WALL PLUG	4pcs

NO	PARTS LIST	QTY
A	SIDE PANEL	2pcs
B	BOTTOM PANEL	1pc
C	UPPER BACK PANEL	1pc
D	LOWER BACK PANEL	1pc
E	UPPER FRONT PANEL	1pc
F	LOWER FRONT PANEL	1pc

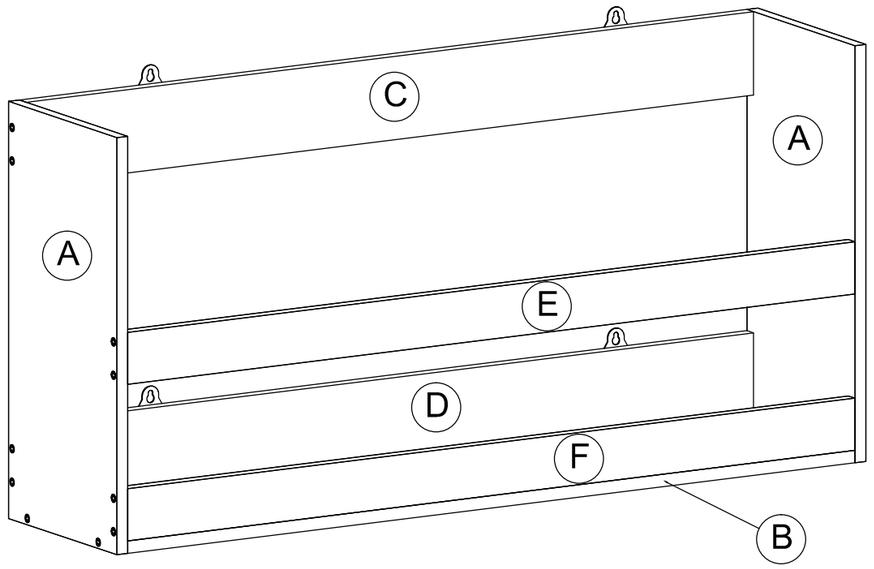

USEFUL HINTS BEFORE YOU START:

1. Read each step carefully before starting.
2. It is important that each step is performed in correct order to avoid difficulties.
3. Identify, sort and count the parts before assembly.
4. Assemble your furniture on packaging cardboard to prevent scratch or damage.
5. Clean the product with mild cleanser using soft damped cloth. Do not use harsh or abrasive cleanser.
6. Using uncompatible hardware might cause damage to product.

ASSEMBLY INSTRUCTIONS

BEFORE YOU BEGIN, PLEASE READ ASSEMBLY INSTRUCTIONS CAREFULLY, FOLLOW THEM STEP BY STEP.

STEP 1

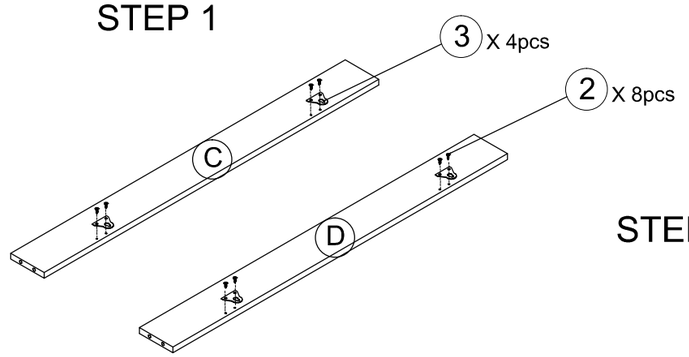

STEP 2

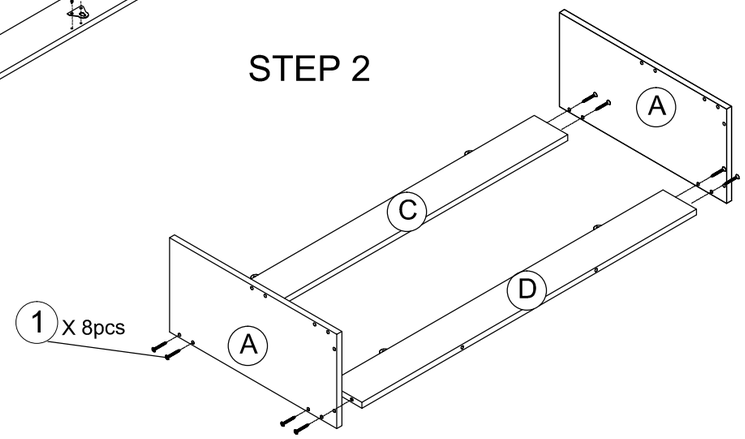

STEP 3

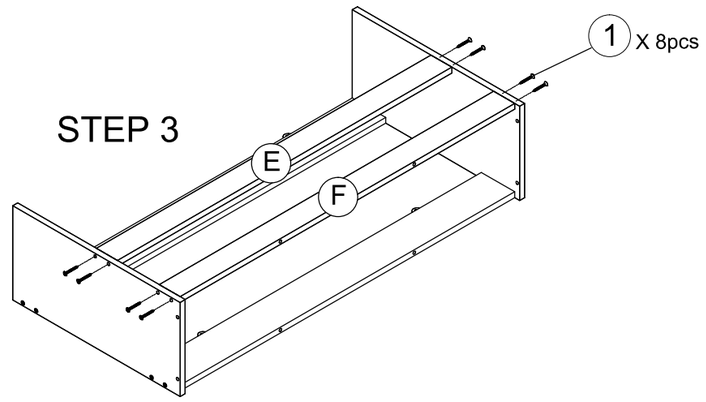

STEP 4

