Furinno®

Fits Space, Fits Budget

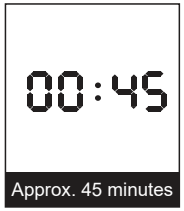

Approx. 45 minutes



Recomm. 2 Person



Tool Required

Assembly Instruction

Furinno Moore L- Shape Computer Desk with 5 - Tier Shelves

MODEL : **20200**

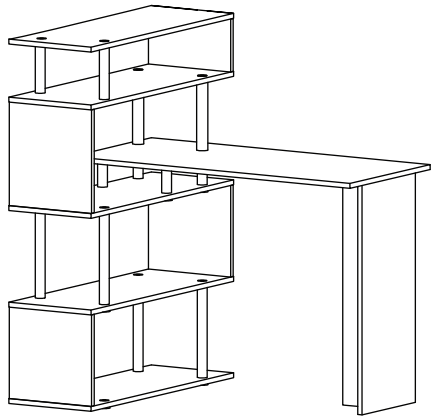

Customer Support

NEED HELP? For replacement requests or product inquiries, please contact our Customer Service Team by emailing us at **support@furinno.com**. Thank you for selecting Furinno!

www.furinno.com

REV2020020220128

HARDWARE AND PART LIST

NO	HARDWARE	QTY
1	MINIFIX 	13 PCS
2	MIDDLE LONG POLE 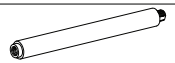	4 PCS
3	EX SHORT POLE 	4 PCS
4	MIDDLE POLE 	2 PCS
5	SHORT POLE 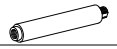	2 PCS
6	STOPPER LEG 	12 PCS
7	TOP CAP 	10 PCS
8	PVC ROUND RING	2 PCS
9	C/B SCREW 	8 PCS

NO	PART	QTY
A	TOP PANEL	1 PC
B	SIDE PANEL	1 PC
C	BACK PANEL	1 PC
D	BOTTOM SHELF PANEL	1 PC
E	2ND & 4TH SHELF PANEL	2 PCS
F	3RD SHELF PANEL	1 PC
G	TOP SHELF PANEL	1 PC
H	MEDIUM SIDE PANEL	2 PCS
I	LARGE PANEL	1 PCS
J	SMALL SIDE PANEL	1 PC

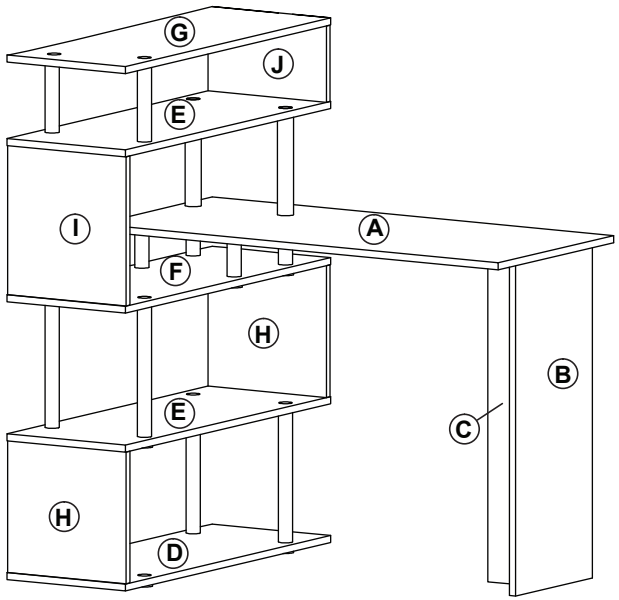

USEFUL HINTS BEFORE YOU START:

1. Read each step carefully before starting.
2. It is important that each step is performed in correct order to avoid difficulties.
3. Identify, sort and count the parts before assembly.
4. Assemble your furniture on packaging cardboard to prevent scratch or damage.
5. Clean the product with mild cleanser using soft damped cloth. Do not use harsh or abrasive cleanser.
6. Using uncompatible hardware might cause damage to product.

STEP 9

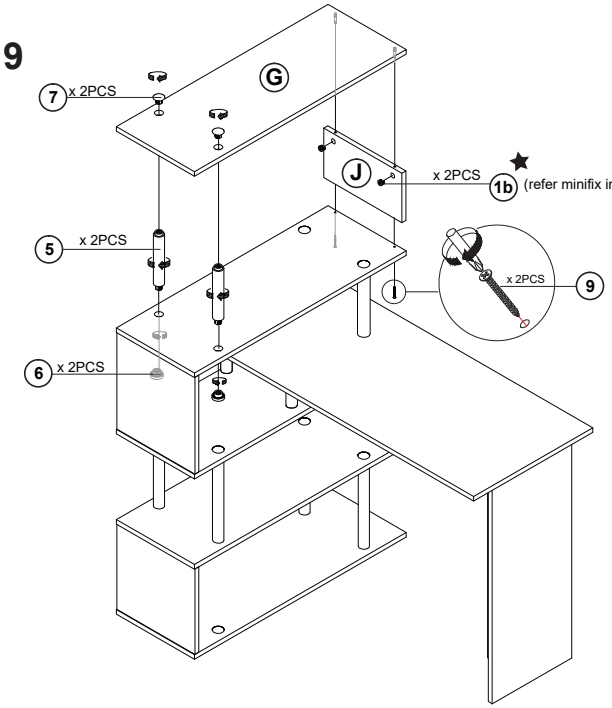

TOOL REQUIRED

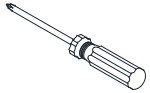

Recommended Maximum Weight

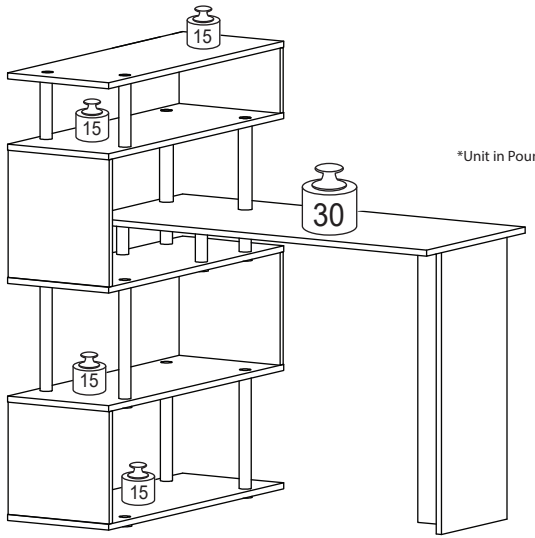

*Unit in Pound(lbs)

WARNING:

>This unit has been designed to support the maximum loads shown. Exceeding these load limits could cause sagging, instability, product collapse, and/or serious injury.

>DO NOT allow children to climb on unit.

>Put heavier items on lower shelves.

STEP 7

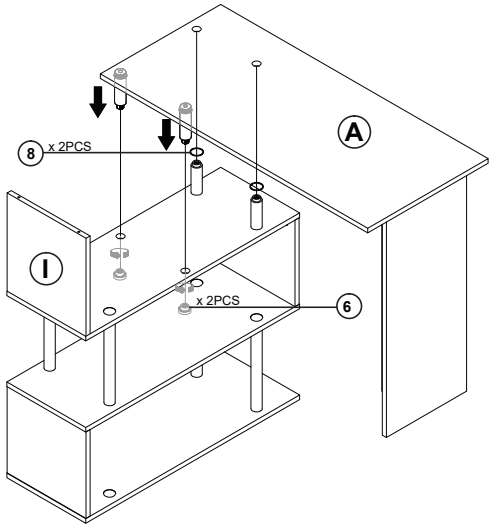

STEP 8

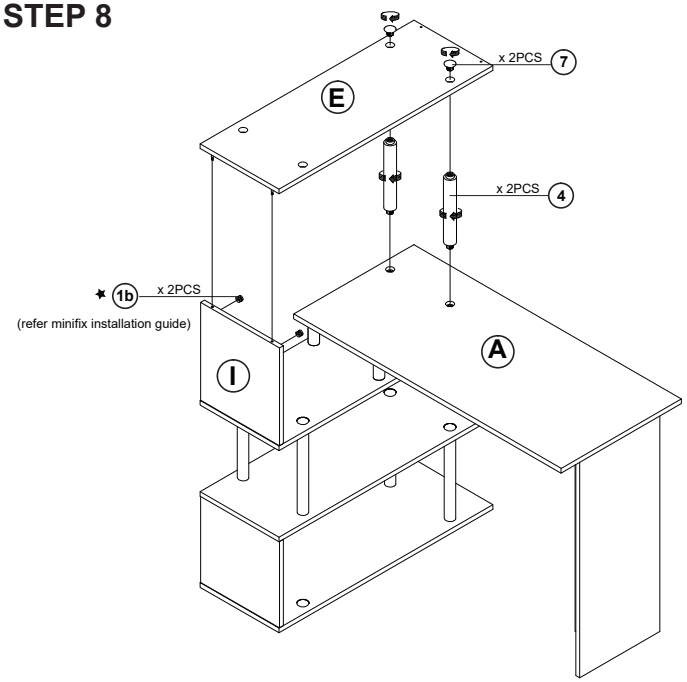

STEP 1

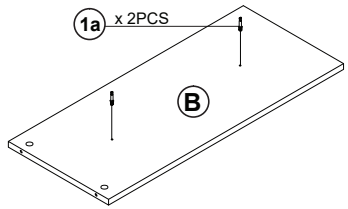

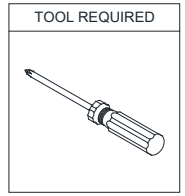

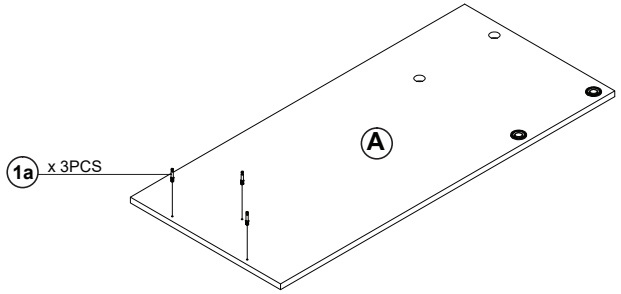

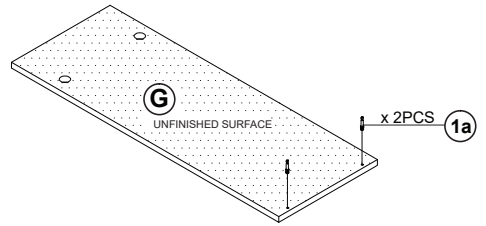

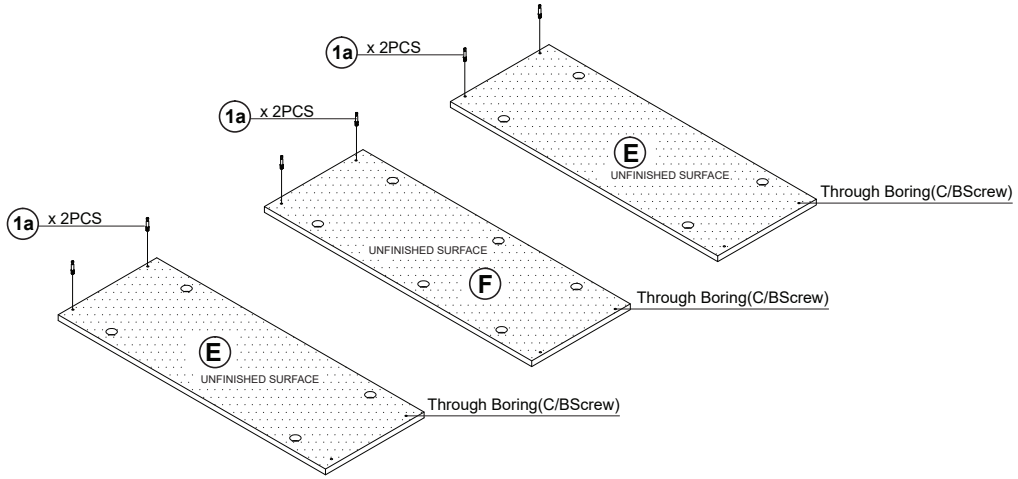

MINIFIX INSTALLATION GUIDE

* STEP 2.1
* STEP 2.2
* STEP 4
* STEP 5
* STEP 8
* STEP 9

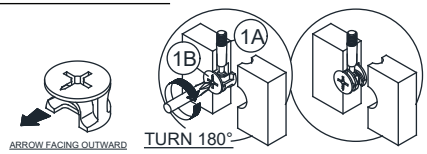

TOOL REQUIRED

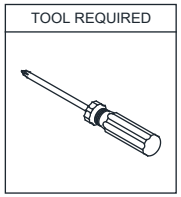

STEP 2

STEP 2.1

STEP 2.2

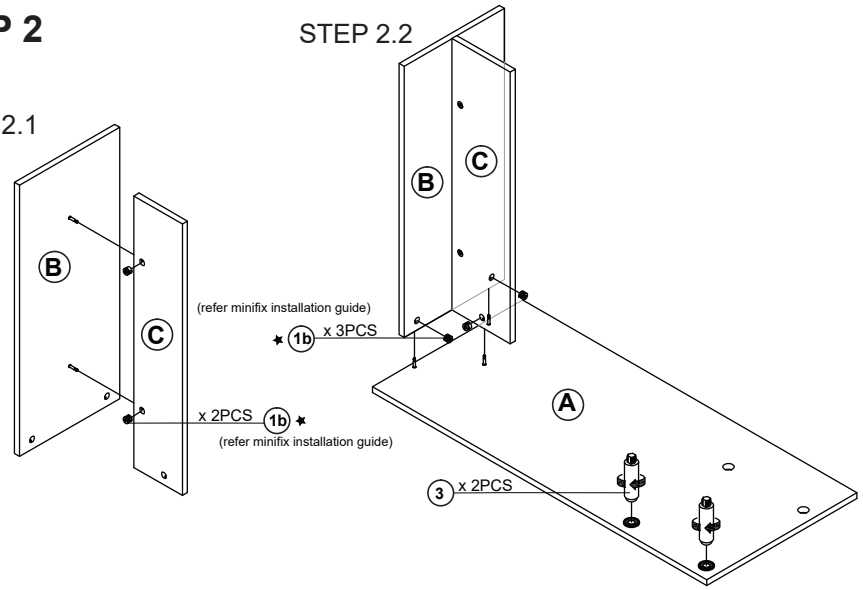

STEP 3

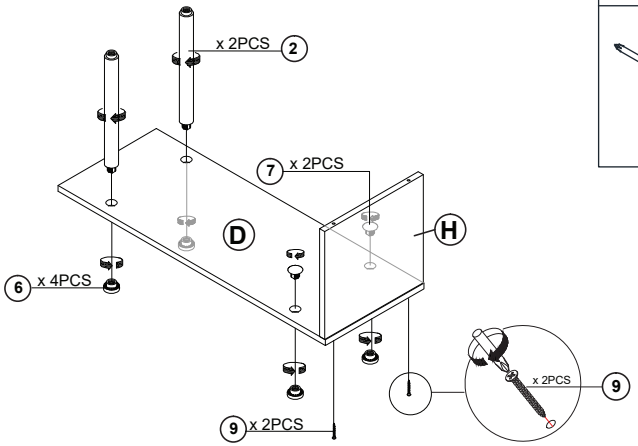

TOOL REQUIRED

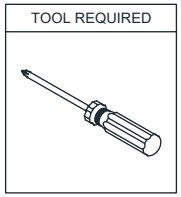

STEP 4

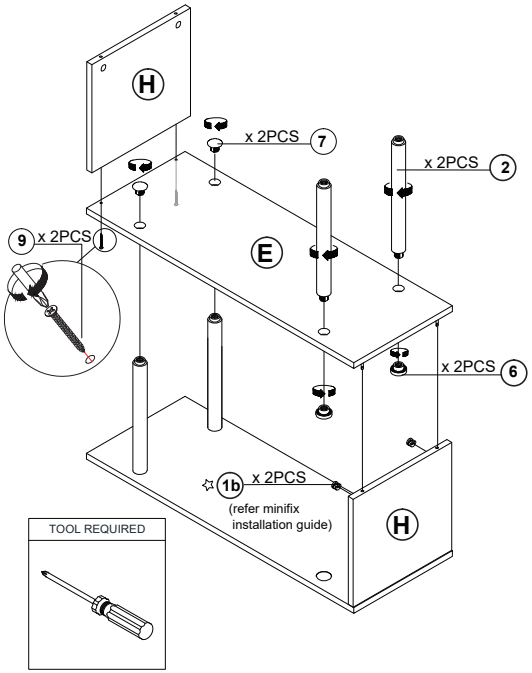

TOOL REQUIRED

STEP 5

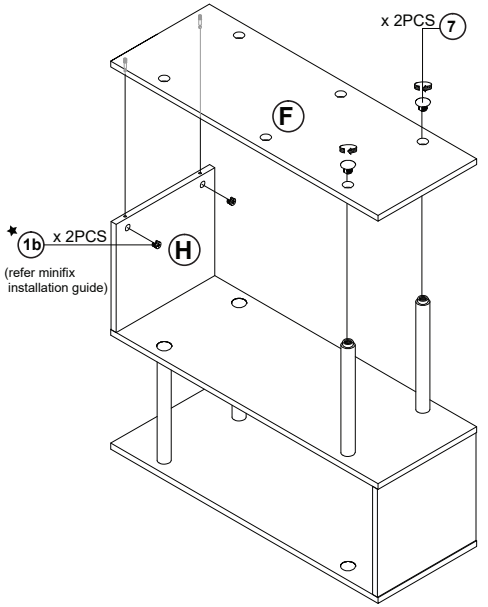

STEP 6

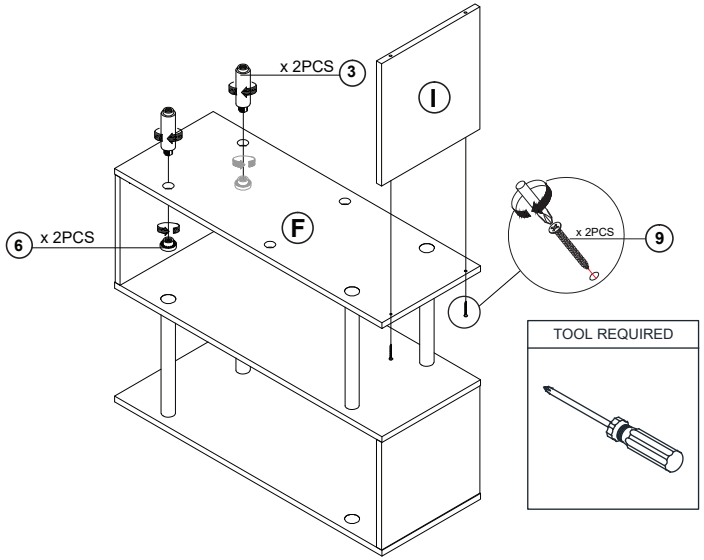

TOOL REQUIRED