18

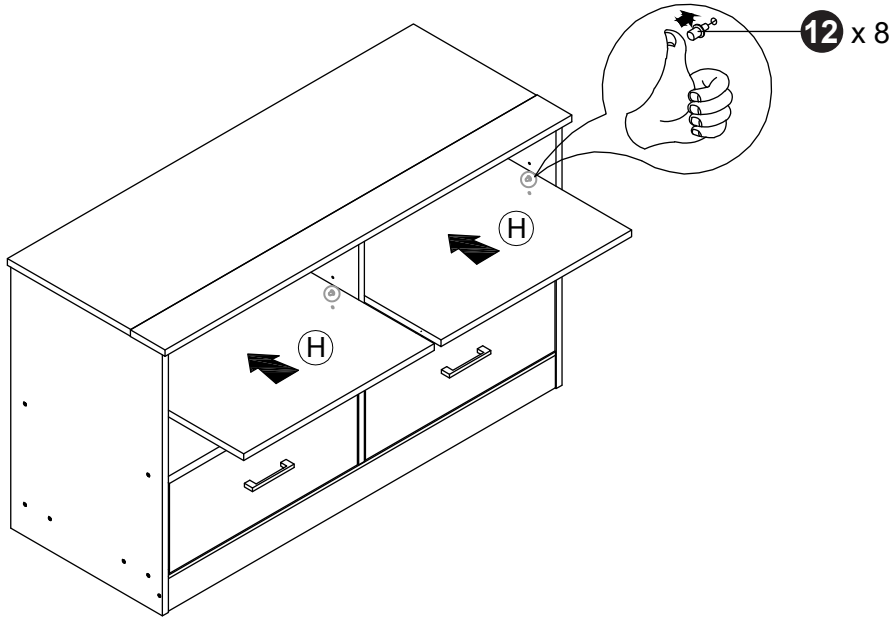

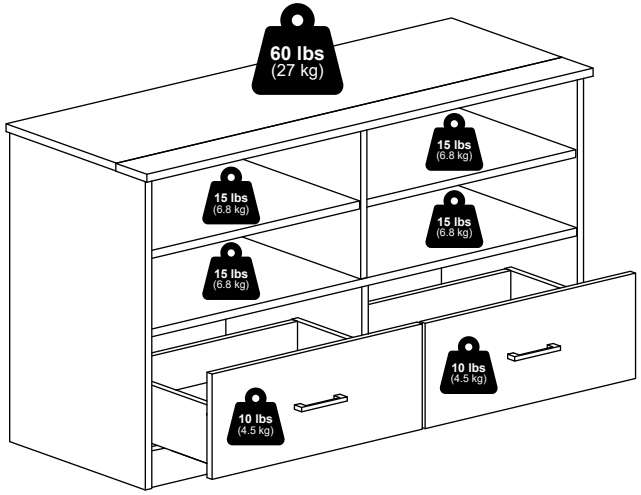

Furinno®

Fits Space, Fits Budget



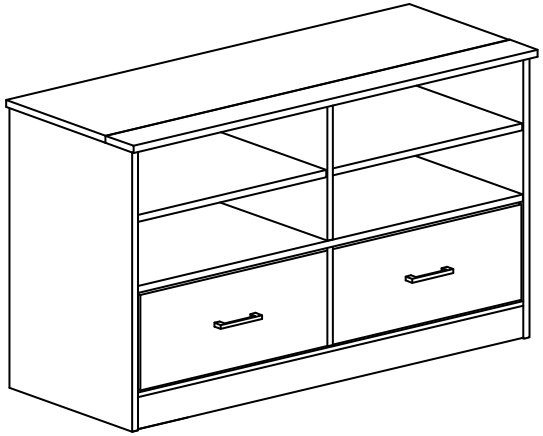

MODEL: 20202

support@furinno.com

www.furinno.com

2020220230601

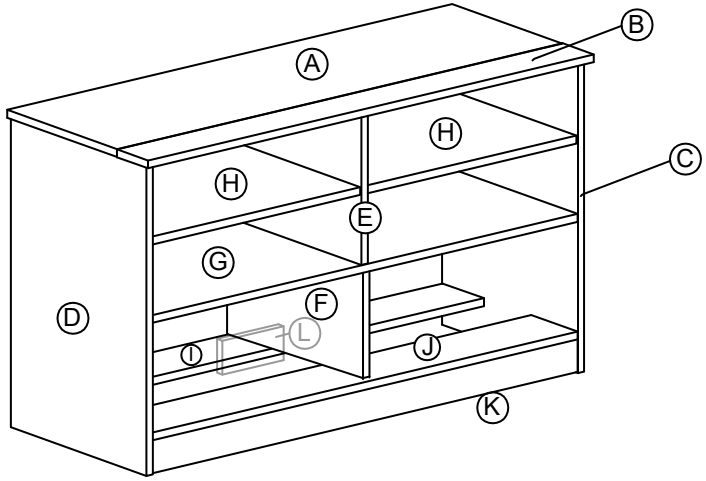

1 x 12 1a M6 x 31mm 1b 15mm	**2** x 20 M5 x 40mm	**3** x 20 4 x 11mm	**4** x 2 17 x 22mm
5 x 4	**7** x 24 M3.5 x 12mm	**8** x 8	**9** x 2
6 x 2 6a CL 6b CR 6c DR 6d DL	**10** x 4 M3.6 x 22mm	**11** x 28 2.5 x 18mm	
	12 x 8 5 x 6 x 16mm	**13** x 1	

16

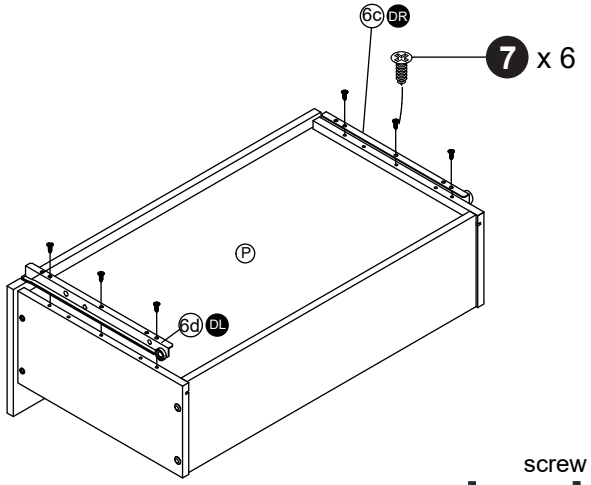

screw position

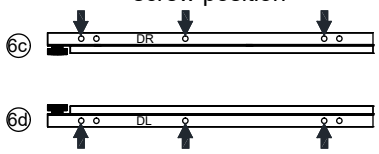

17

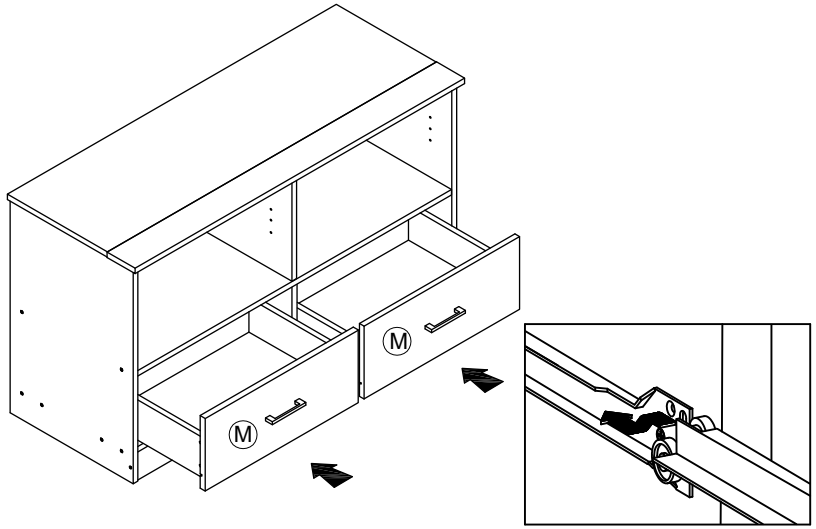

13

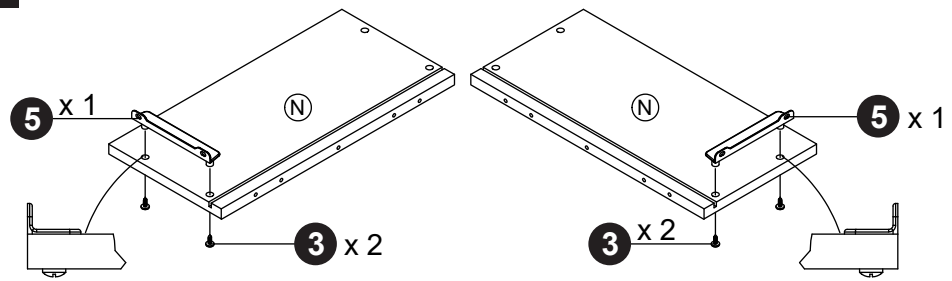
5 x 1
N
3 x 2
N
5 x 1
3 x 2

14

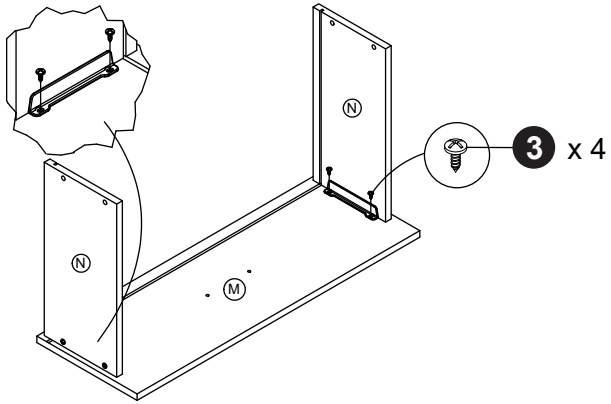
N
3 x 4
N
M

15

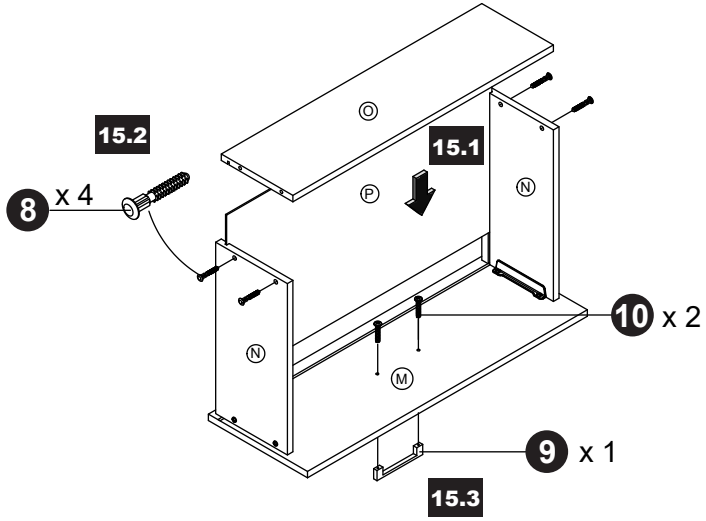
15.2
15.1
8 x 4
O
P
N
10 x 2
N
M
9 x 1
15.3

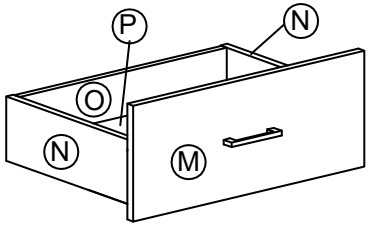
P
N
O
N
M

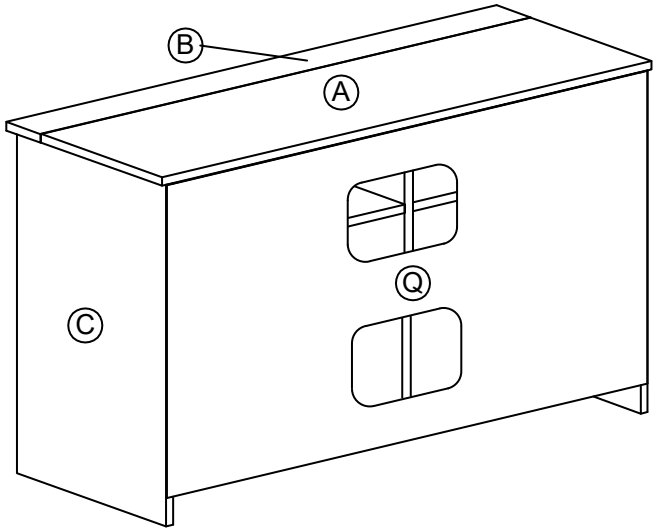
B
A
Q
C

1

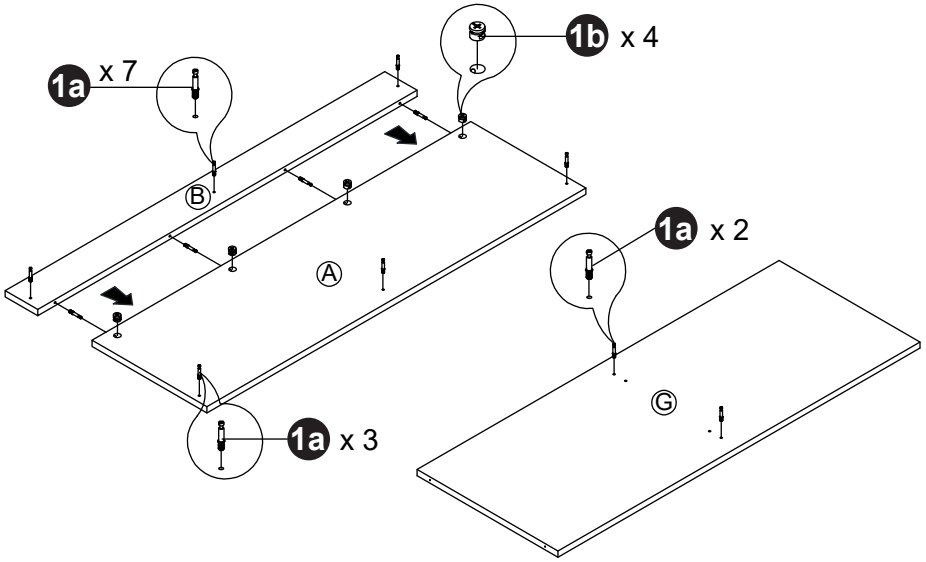
1a x 7
1b x 4
Ⓑ
Ⓐ
1a x 2
1a x 3
Ⓖ

2

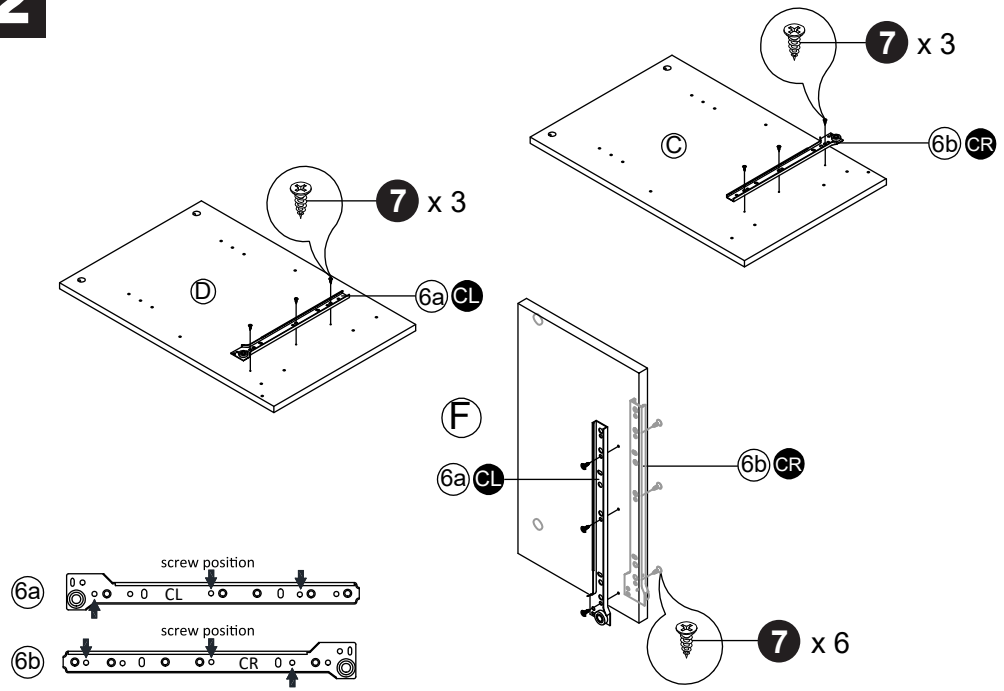
7 x 3
6b CR
Ⓒ
7 x 3
Ⓓ
6a CL
Ⓕ
6a CL
6b CR
7 x 6
screw position
6a
CL
screw position
6b
CR

11

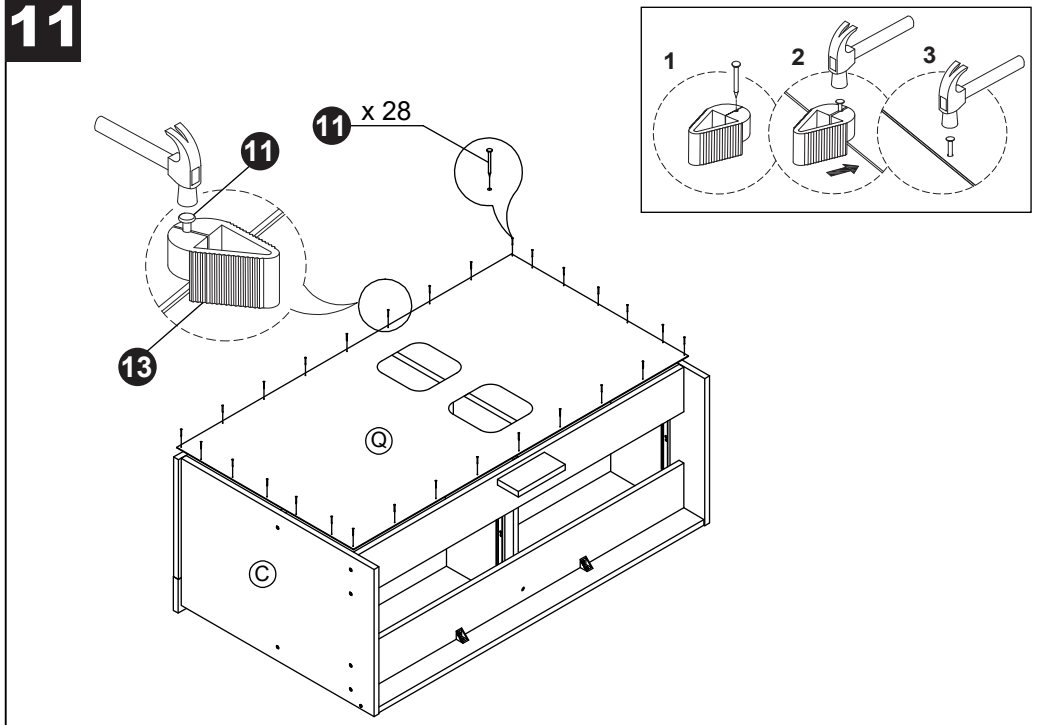
1
2
3
11
11 x 28
13
Ⓠ
Ⓒ

12

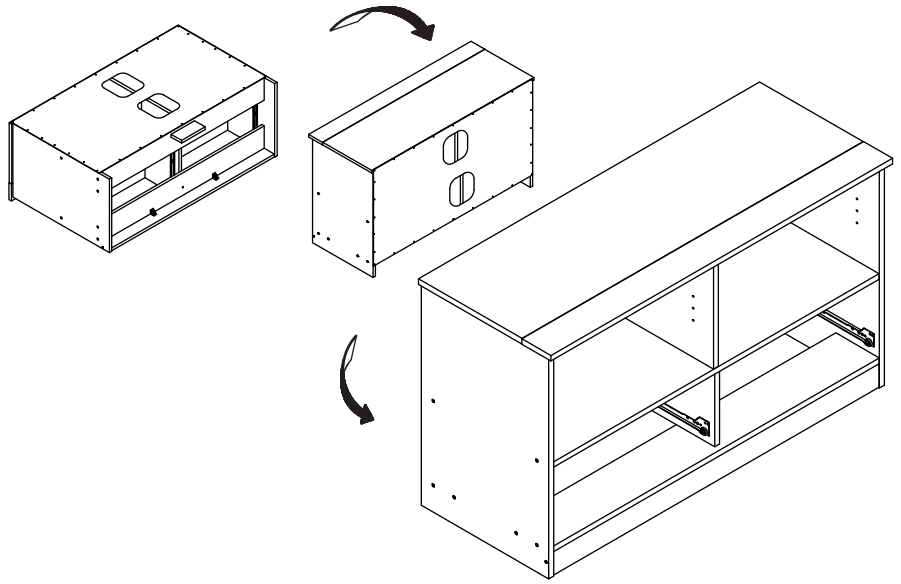

9

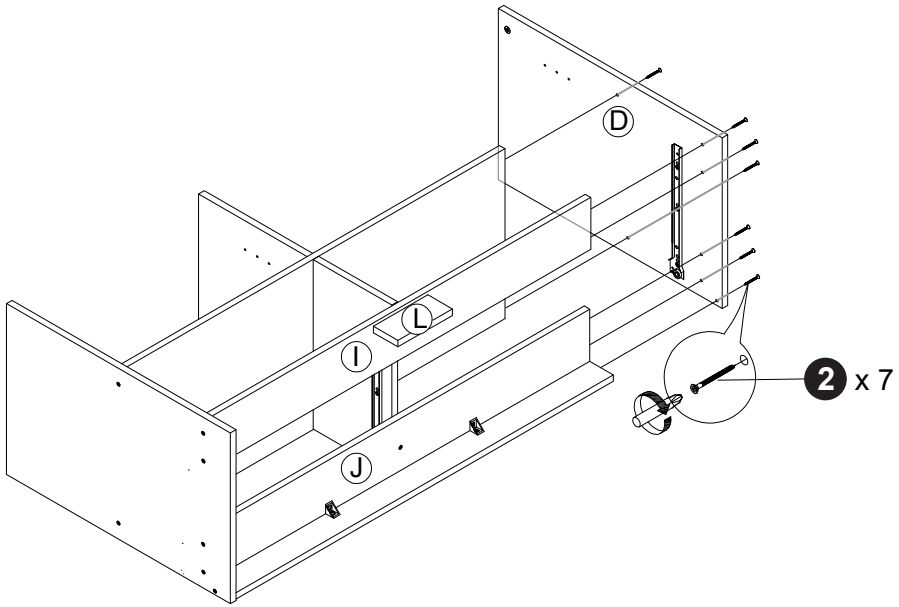

10

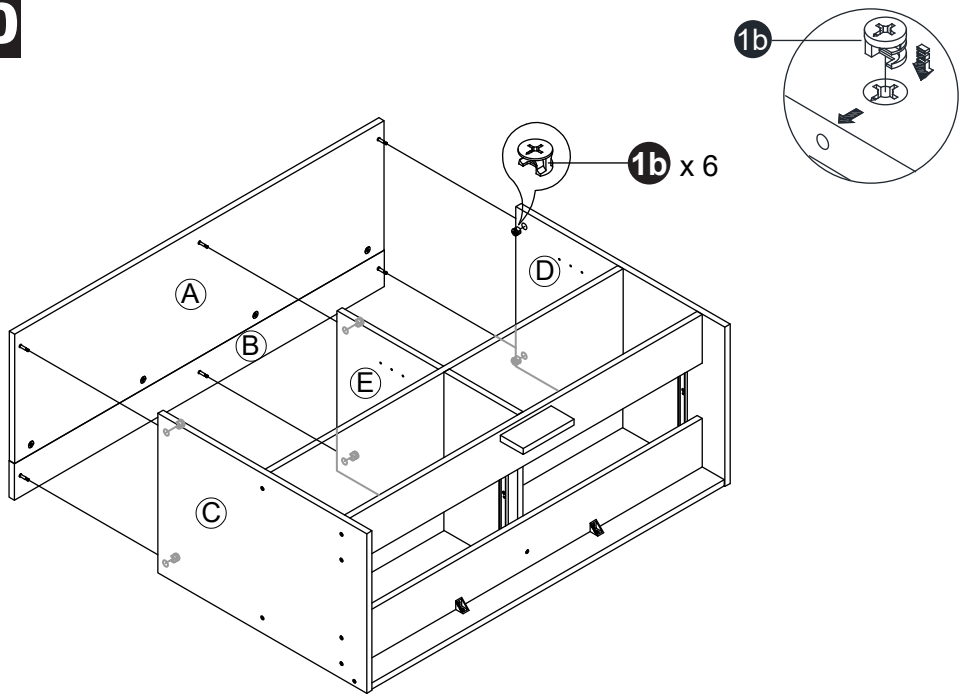

3

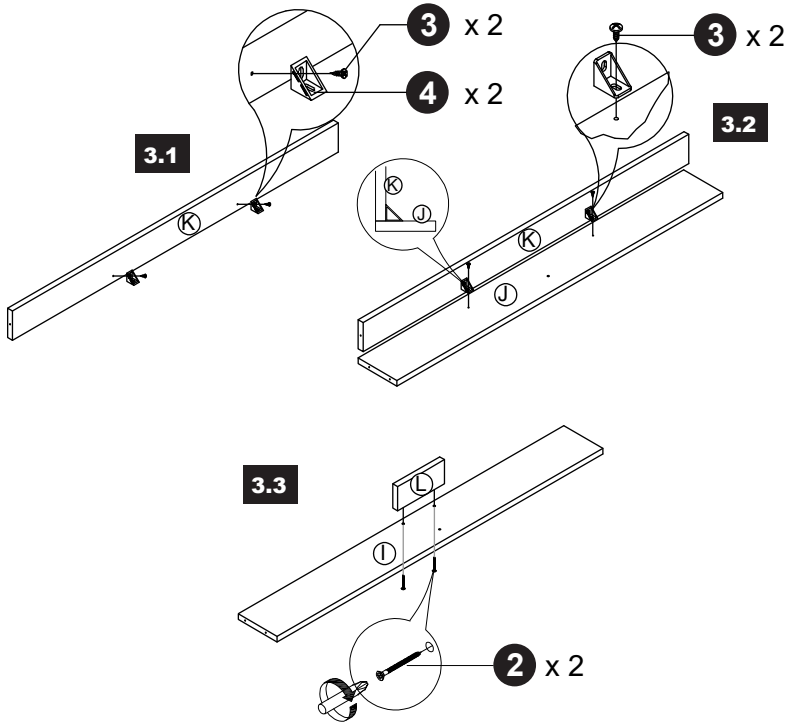

4

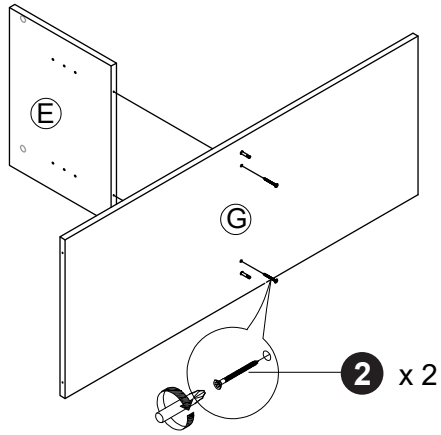

5

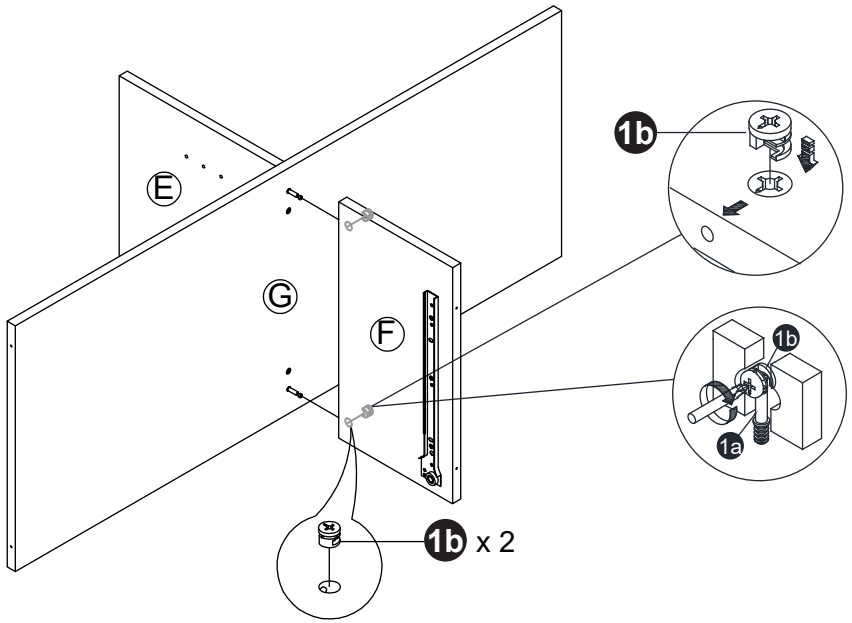

6

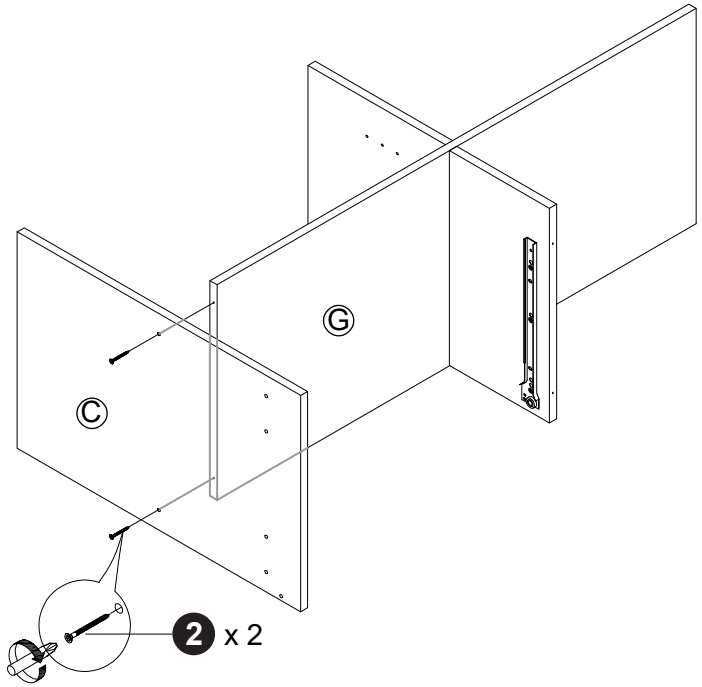

7

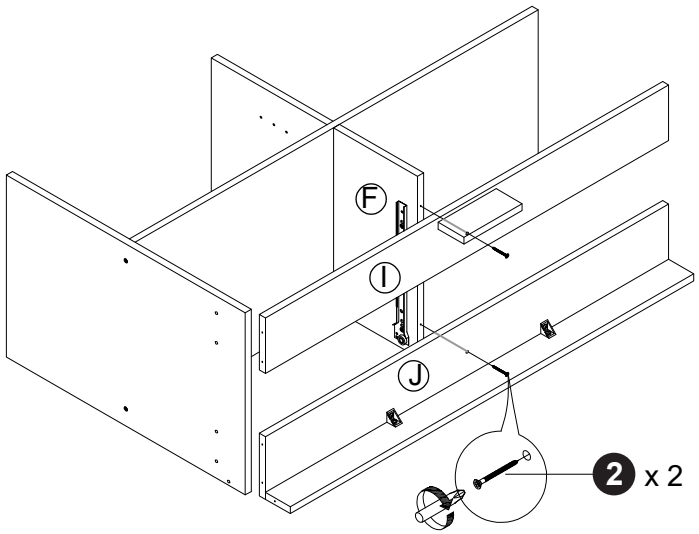

8

