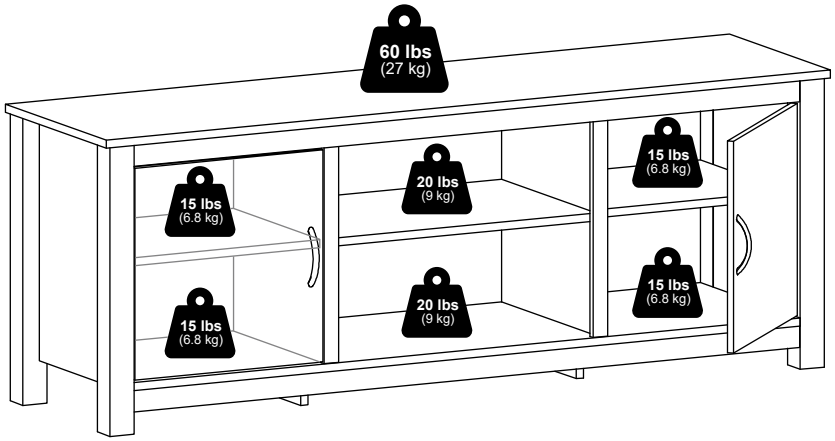

Furinno®

Fits Space, Fits Budget

00:45

x 2

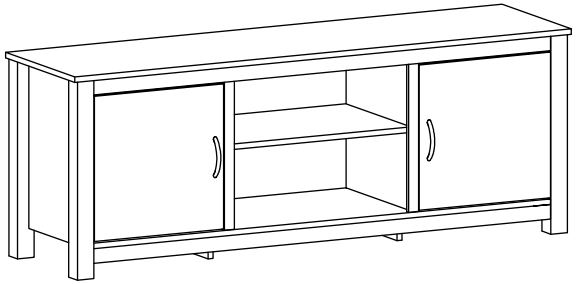

MODEL: 20222

support@furinno.com

www.furinno.com

2022220230601

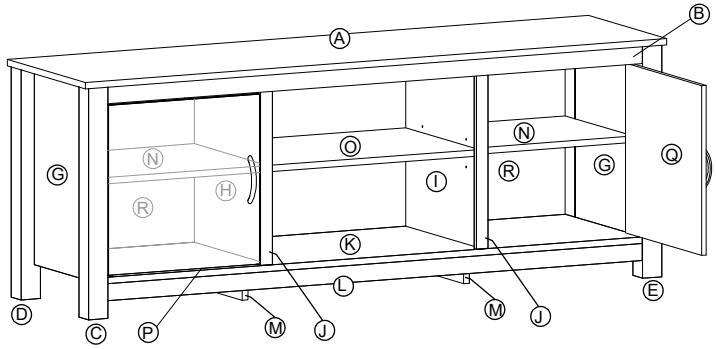

1 x 34 1a M6 x 31mm 1b 15mm	**2** x 12 M5 x 40mm	**3** x 2	**4** x 2 M5 x 6mm
5 x 2	**6** x 4 M3.6 x 19mm	**7** x 12 M5 x 14mm	**8** x 4 8a 8b 8c
	9 x 32 4 x 20mm	**10** x 1	

13

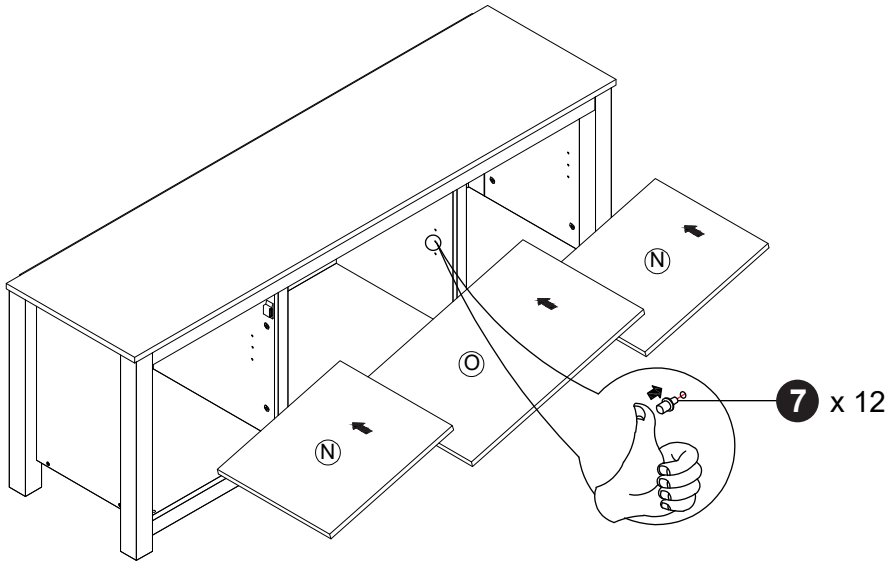

14

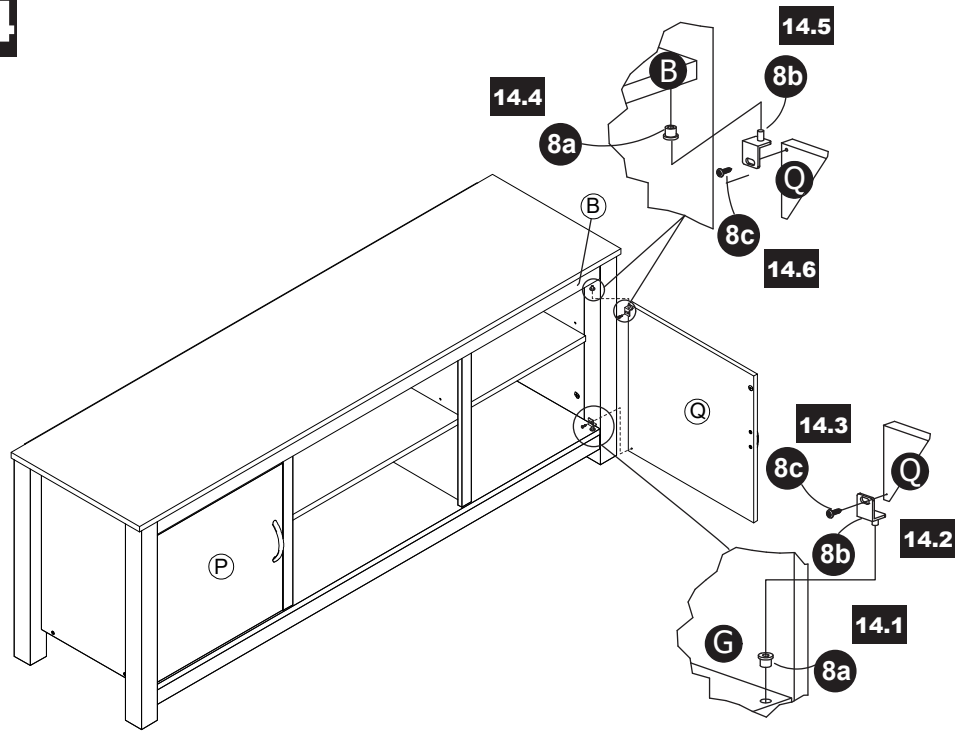

12

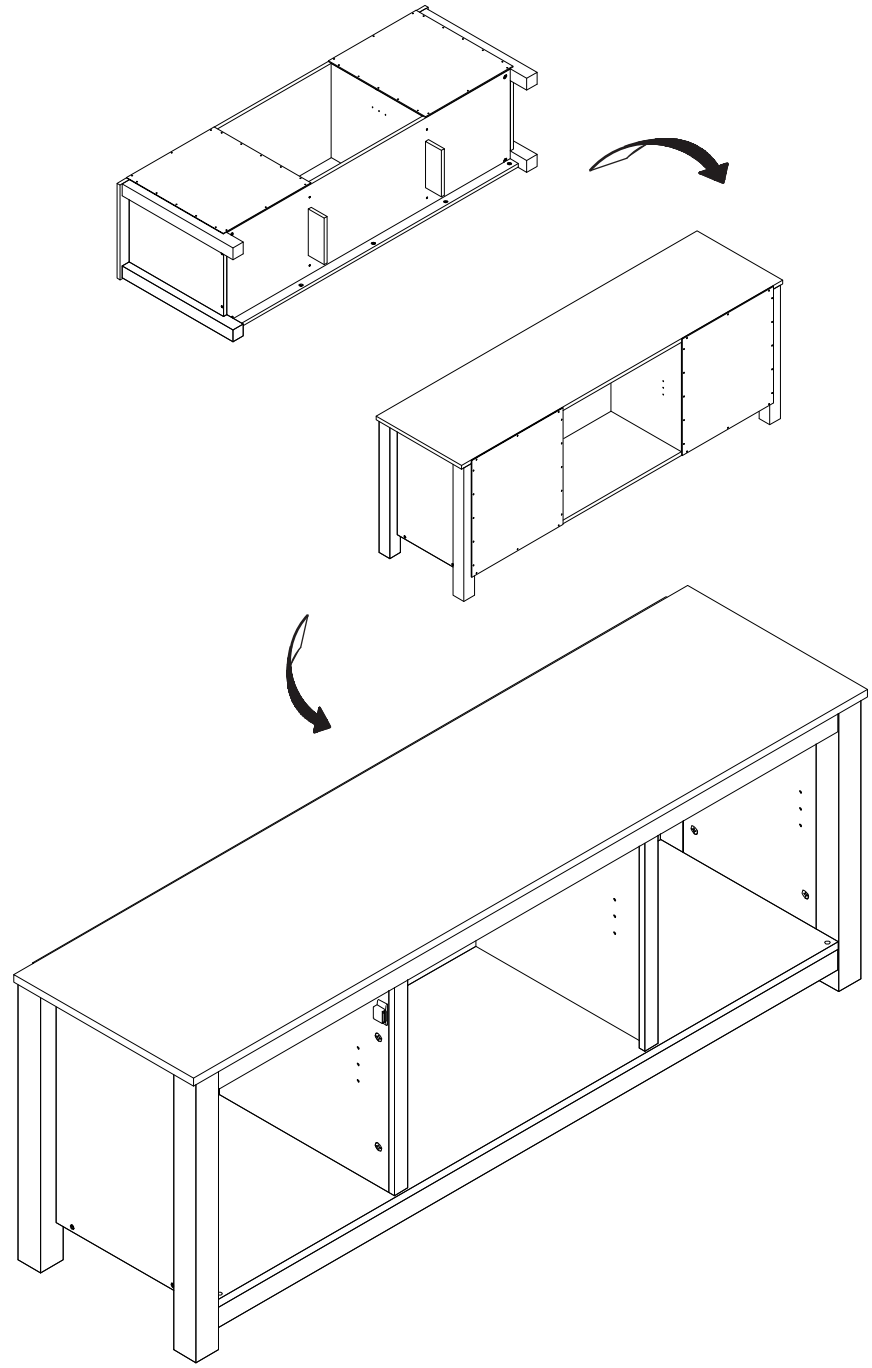

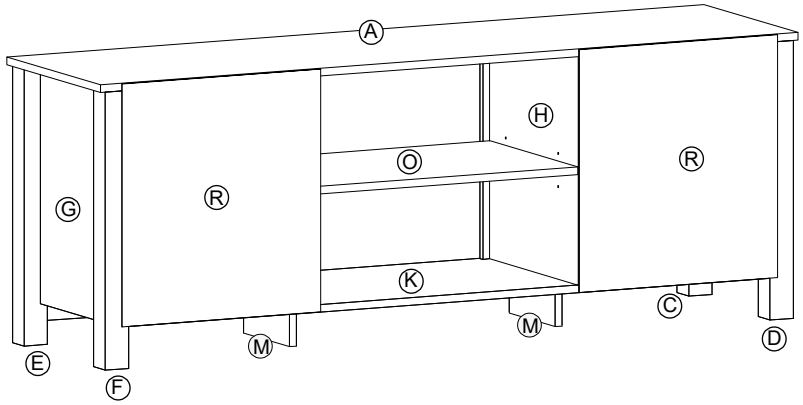

1

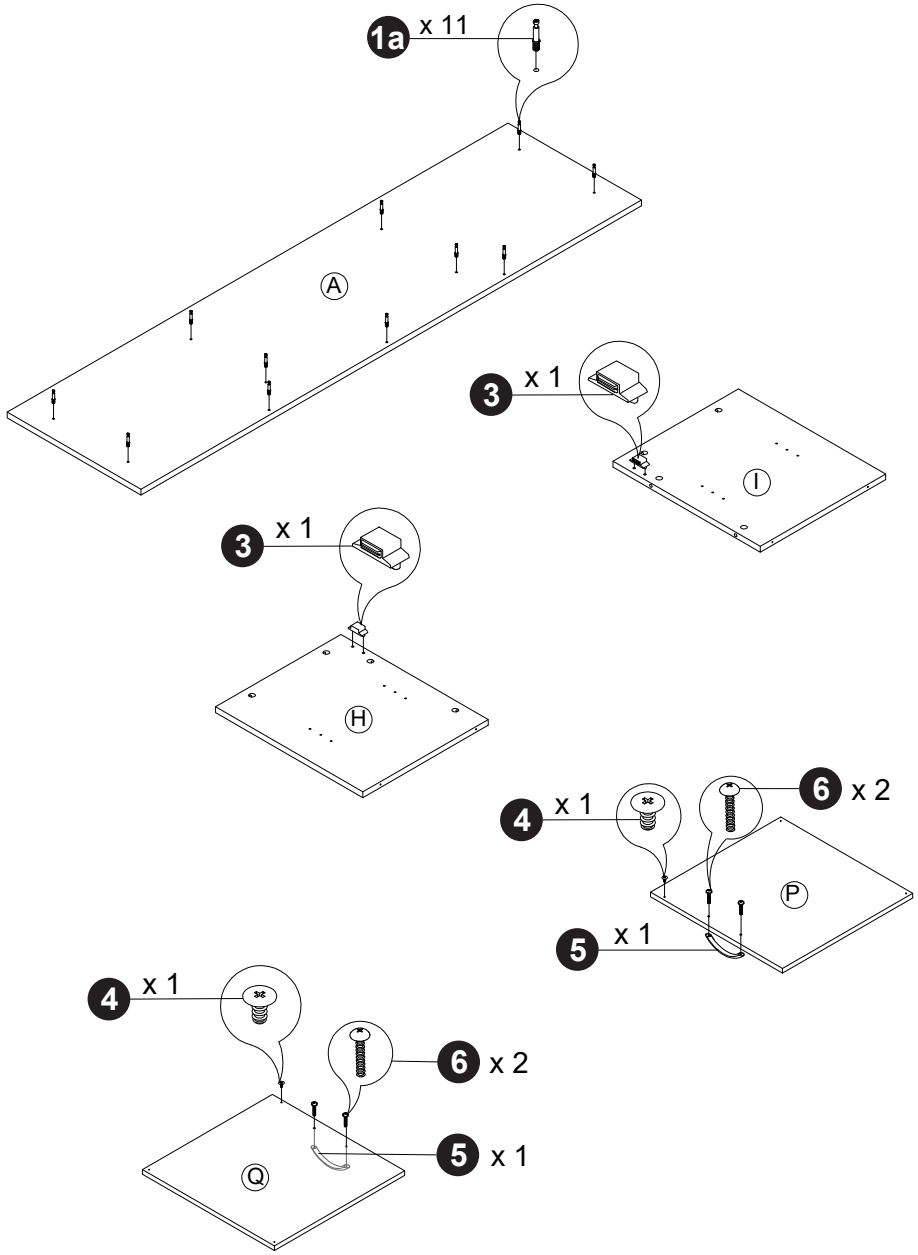
1a x 11
A
3 x 1
I
3 x 1
H
4 x 1
6 x 2
P
5 x 1
4 x 1
6 x 2
5 x 1
Q

10

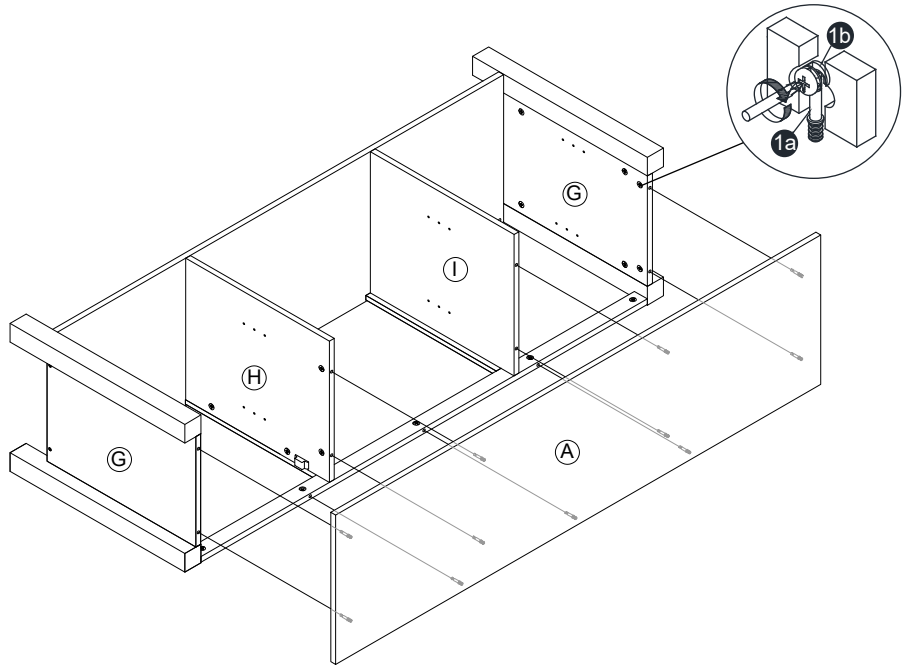
1b
1a
G
I
H
G
A

11

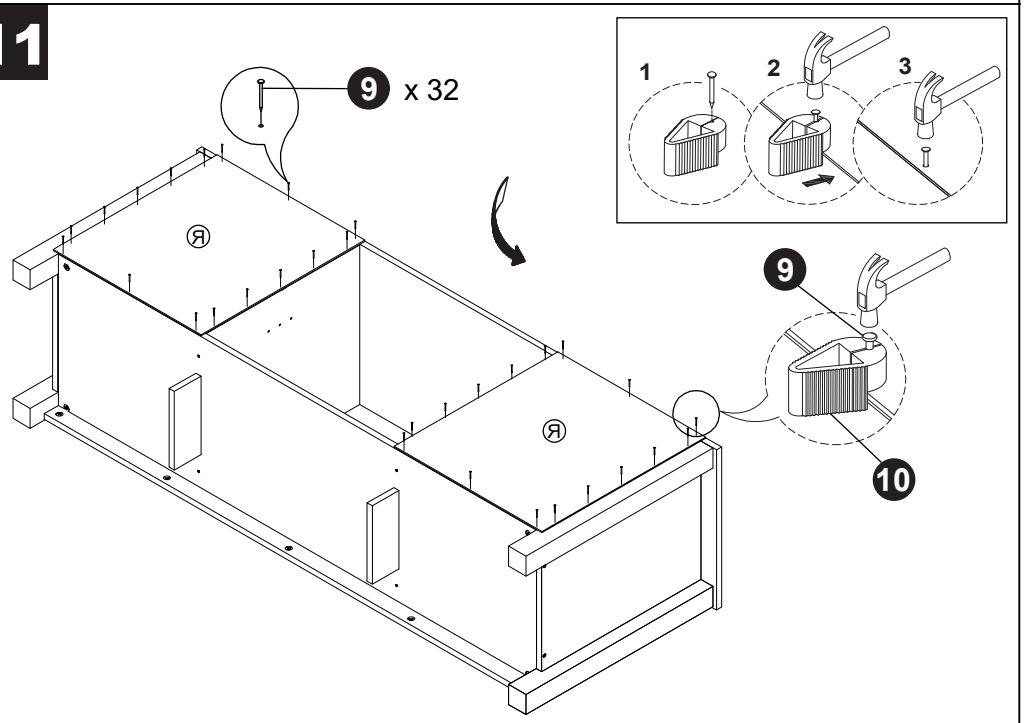
9 x 32
1
2
3
Я
Я
9
10

8

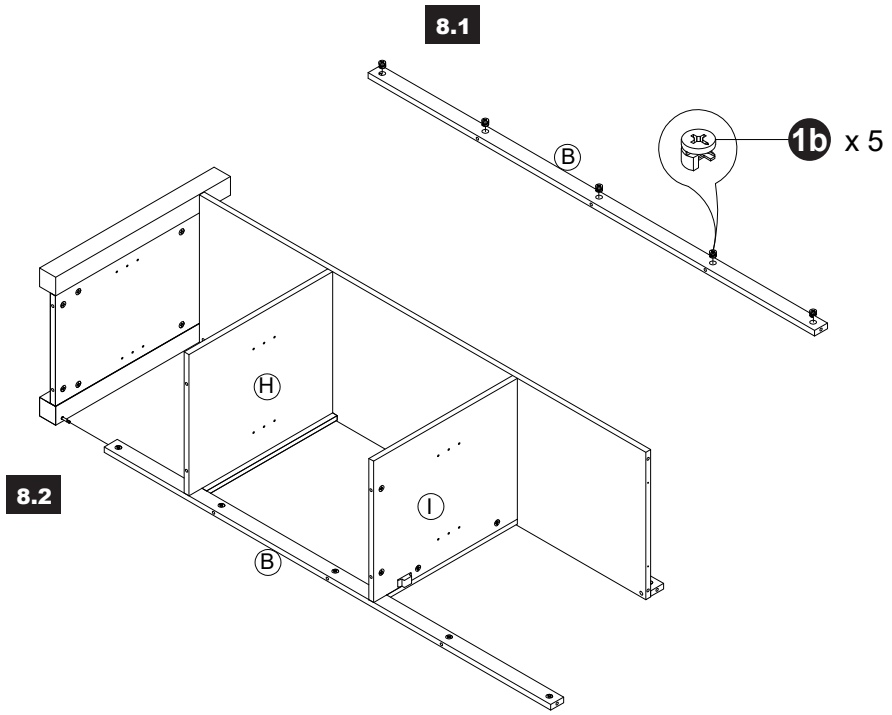
8.1
B
1b x 5
H
I
8.2
B

9

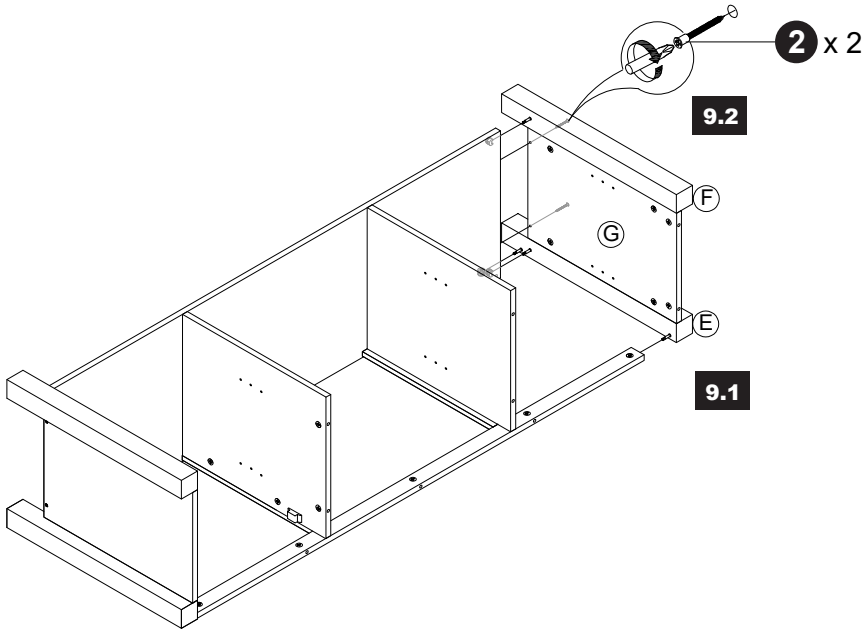
2 x 2
9.2
F
G
E
9.1

2

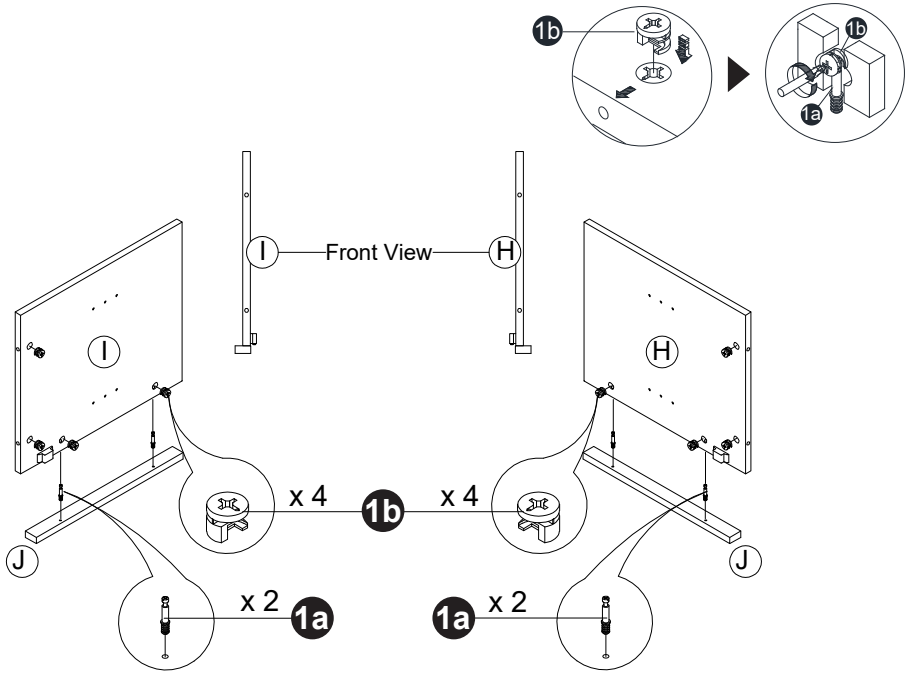
1b
1a
I
Front View
H
I
H
x 4
1b
x 4
J
J
x 2
1a
1a
x 2

3

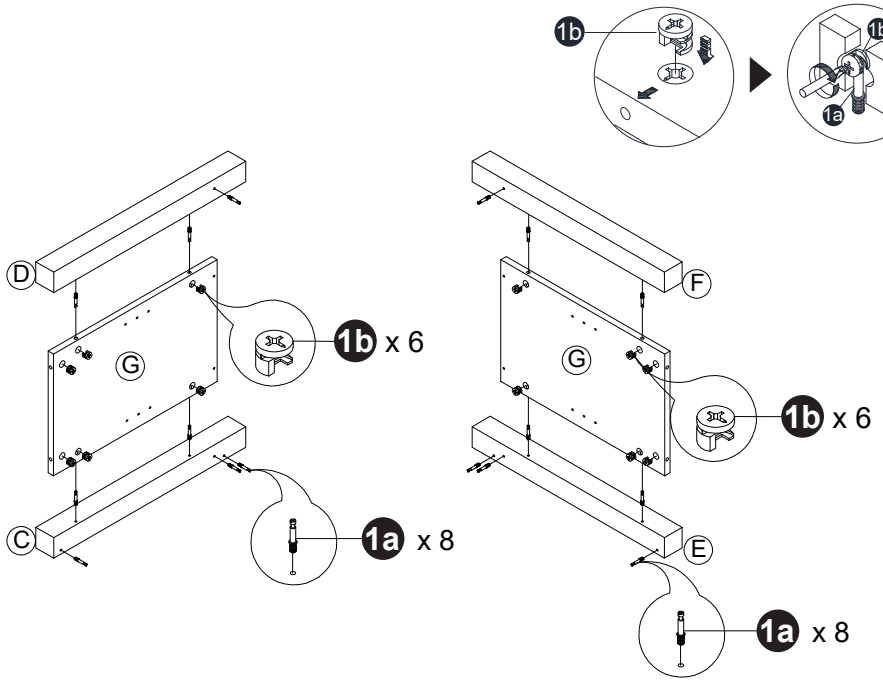
1b
1a
D
G
1b x 6
C
1a x 8
F
G
1b x 6
E
1a x 8

4

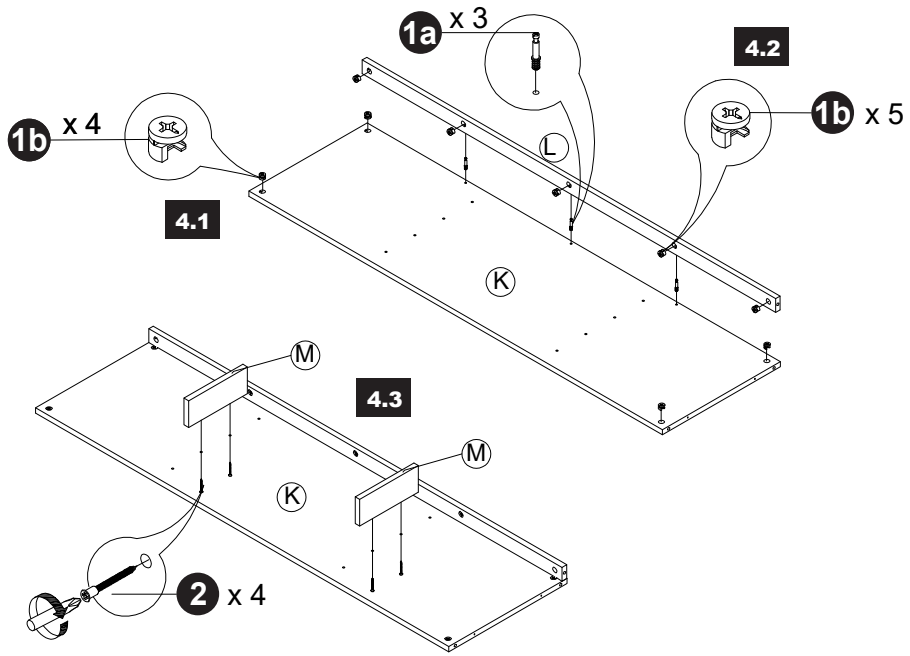

5

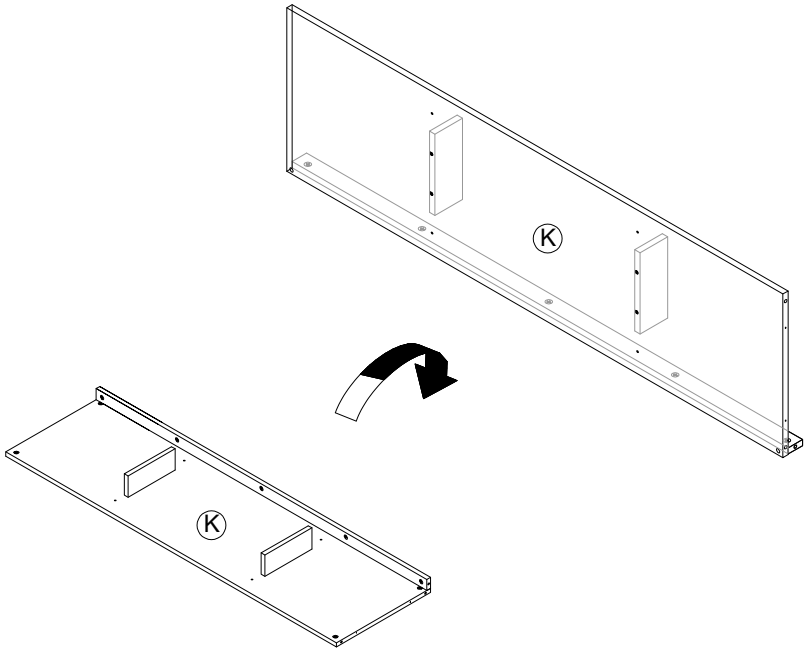

6

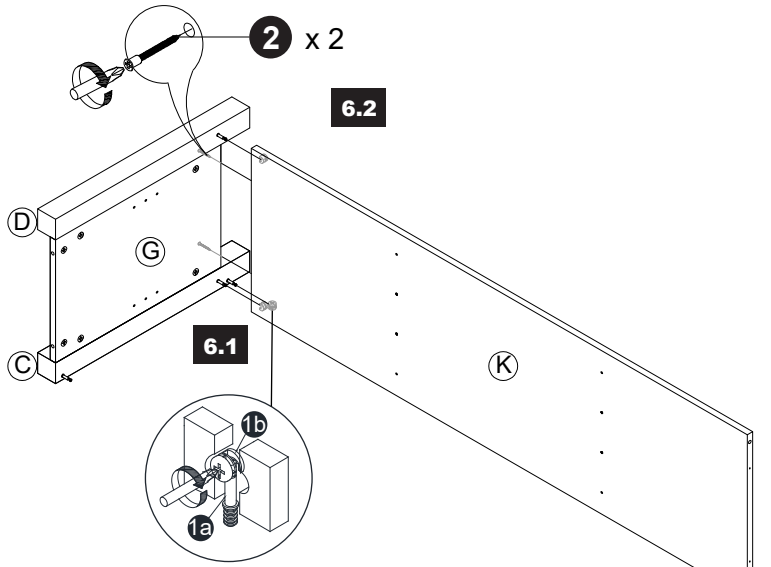

7

