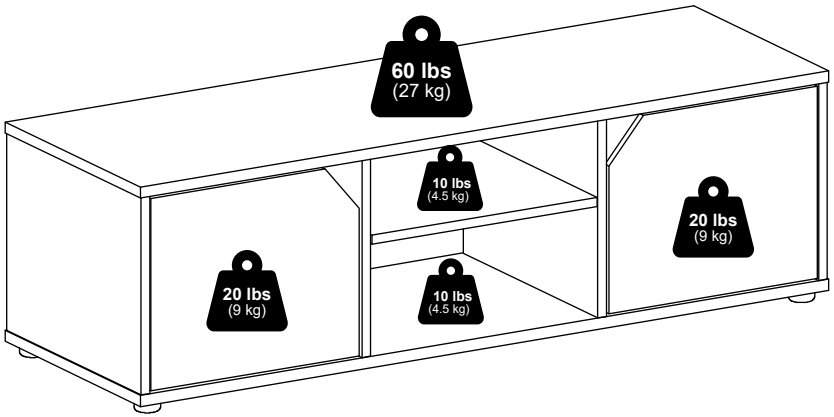

Furinno®

Fits Space, Fits Budget



00:30



x 1

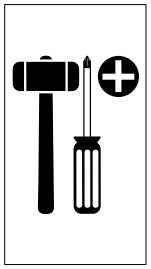

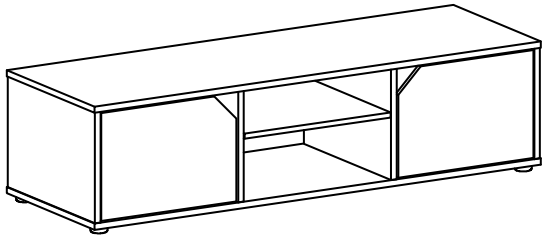

MODEL: 20230

support@furinno.com

www.furinno.com

2023020230609

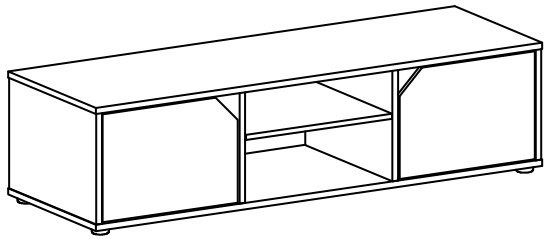

1 x 8 M6 X 31mm	2 x 8 15mm	3 x 8 M5 X 40mm	4 x 4 6mm
5 x 2	6 x 2 M5 x 6mm	7 x 5 34 X 8mm	8 x 4 5 x 6 x 16mm
9 x 28 2.5 x 18mm	10 x 1		

9

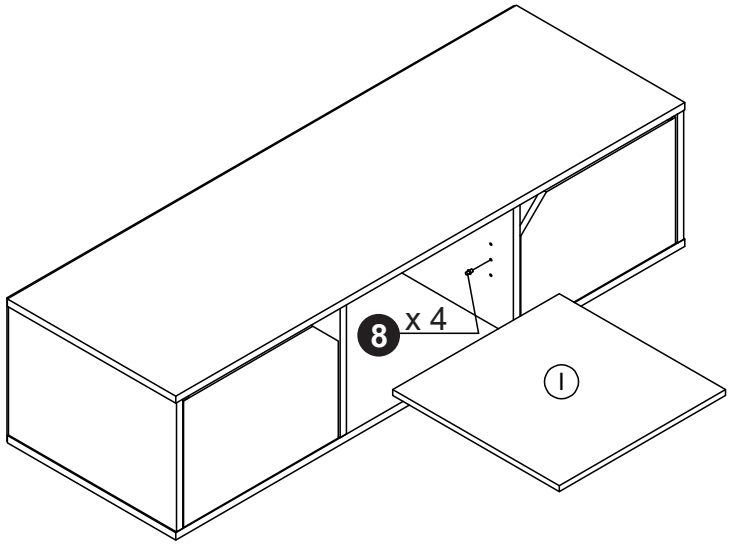

7

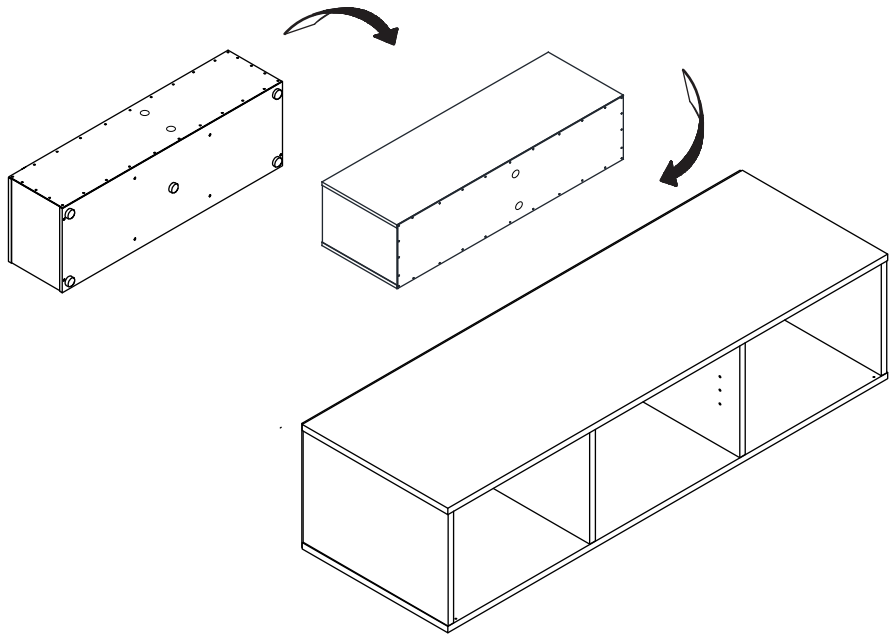

8

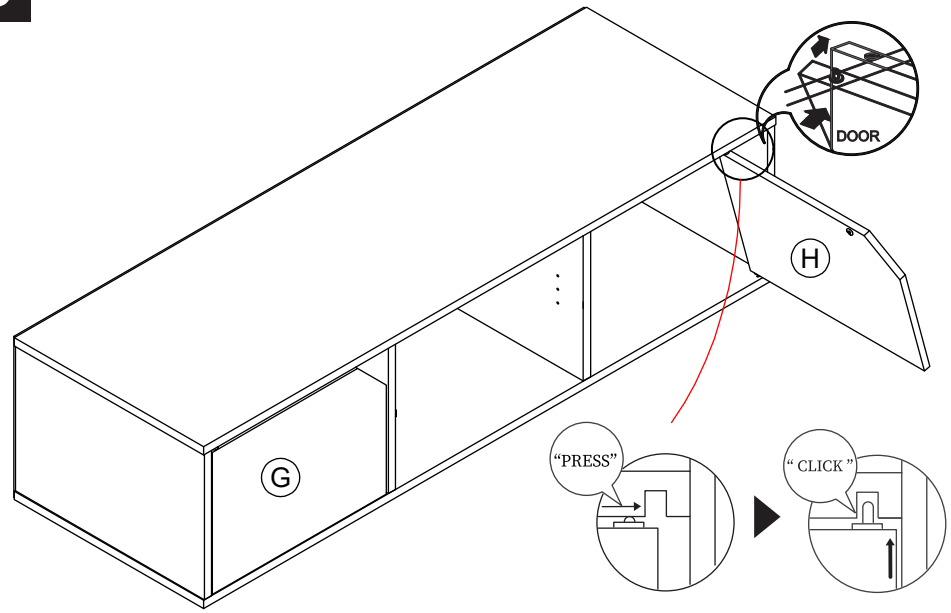

1

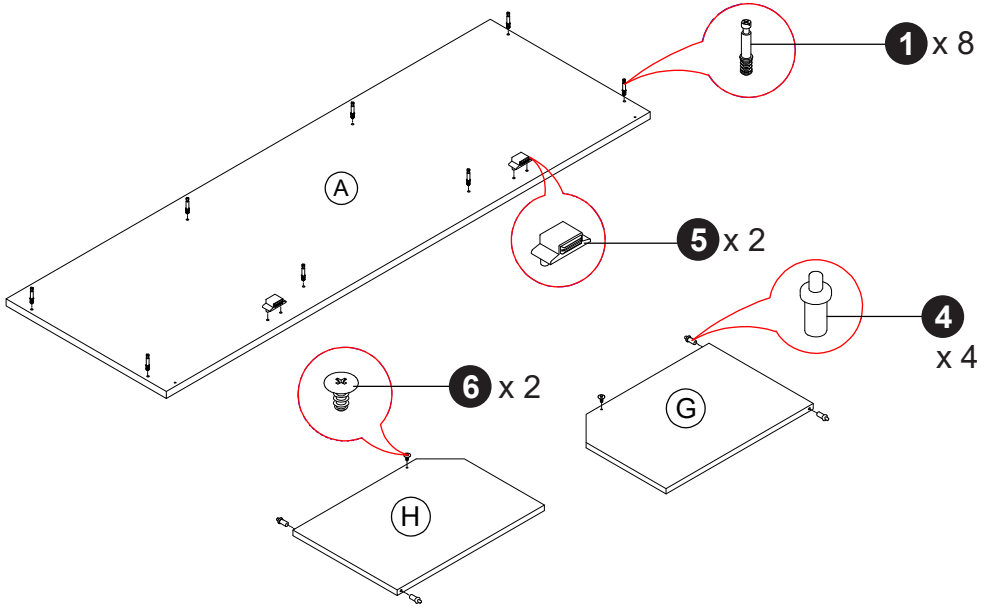

2

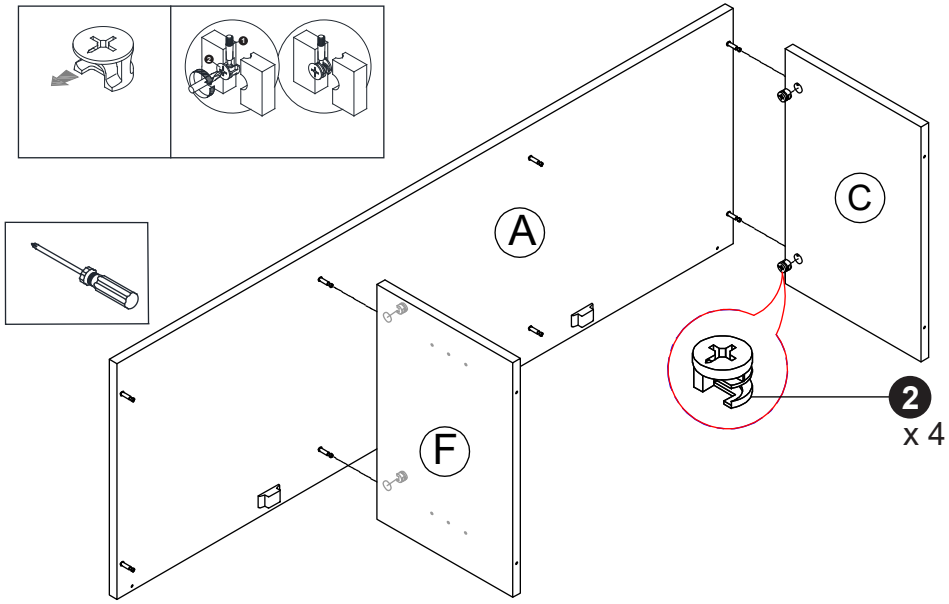

3

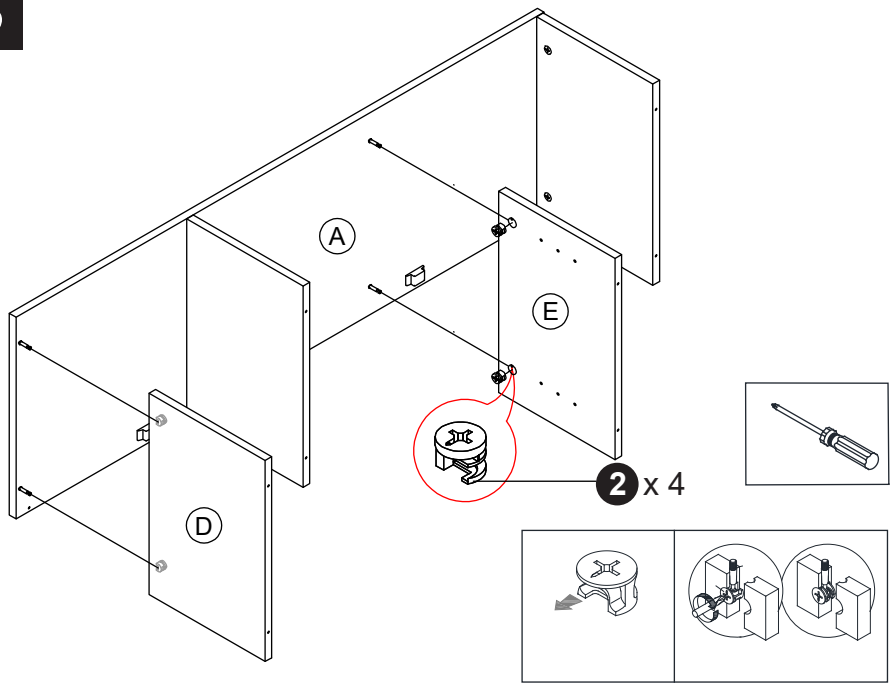

4

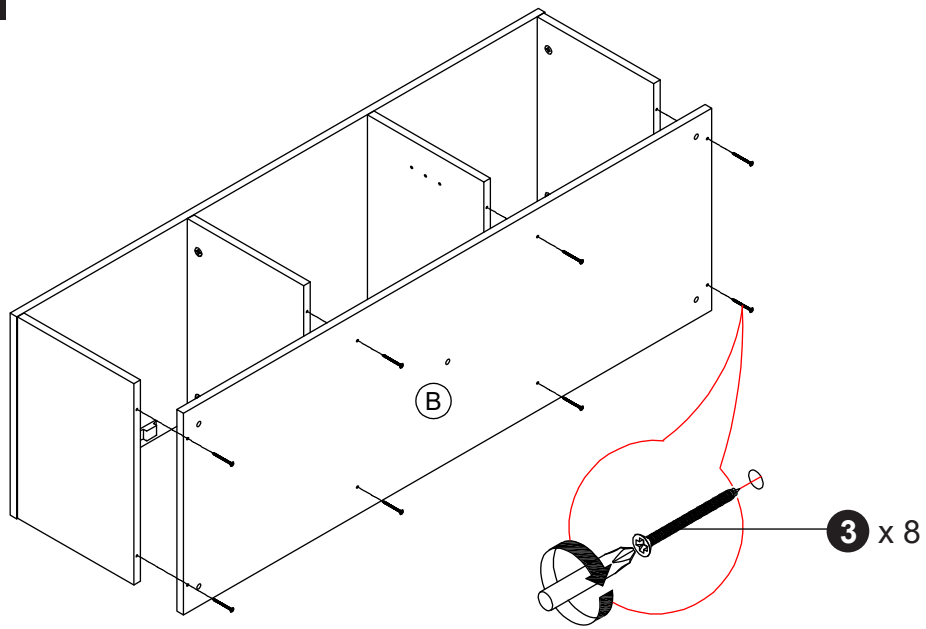

5

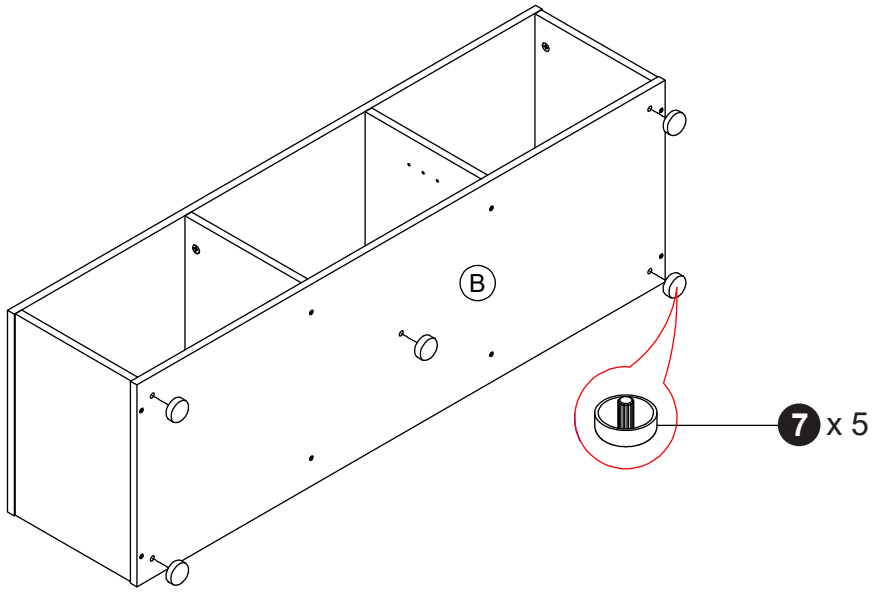

6

