## Recommended Maximum Weight

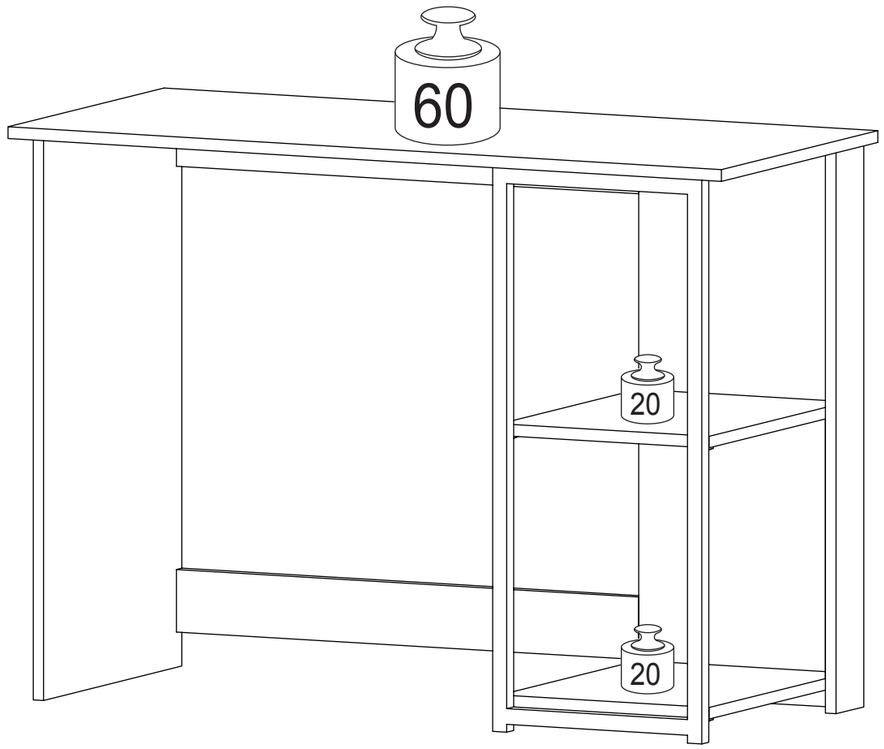


*Unit in Pound(lbs.)

***WARNING:***

>This unit has been designed to support the maximum loads shown. Exceeding these load limits could cause sagging, instability, product collapse, and/or serious injury.

>DO NOT allow children to climb on unit.

Furinno®
Fits Space. Fits Budget

00:20
Approx. 20 minutes

Recomm. 2 Persons

Tools Required

# *Assembly Instruction*

Furinno Camnus Modern Living Computer Desk 40”

MODEL : **20256**

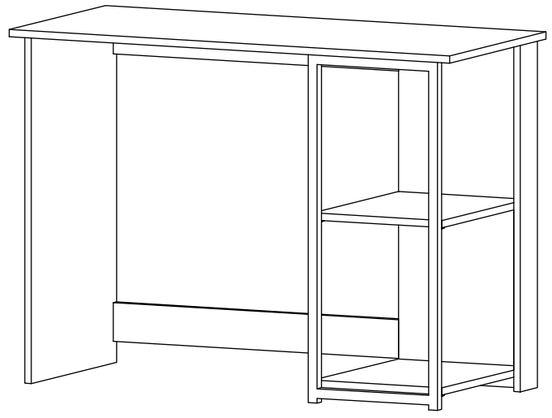

## *Customer Support*

**NEED HELP?** For replacement requests or product inquiries, please contact our Customer Service Team by emailing us at **support@furinno.com**. Thank you for selecting Furinno!

***www.furinno.com***

2025620210524

# HARDWARE & PARTS LIST

| NO | HARDWARE LIST | QTY |
|---|---|---|
| A | MINIFIX BOLT | 5pcs |
| B | MINIFIX CAM | 5pcs |
| C | SCREW | 12pcs |
| D | TRUSS HEAD SCREW | 22pcs |
| E | DOWEL | 4pcs |
| F | METAL PLATE | 2pcs |

| NO | PART LIST | QTY |
|---|---|---|
| 1 | METAL FRAME | 1pc |
| 2 | TOP PANEL | 1pc |
| 3 | SHELF PANEL | 2pcs |
| 4 | SIDE PANEL | 1pc |
| 5 | SMALL SIDE PANEL | 1pc |
| 6 | BACK PANEL | 1pc |
| 7 | SMALL BACK PANEL | 2pcs |

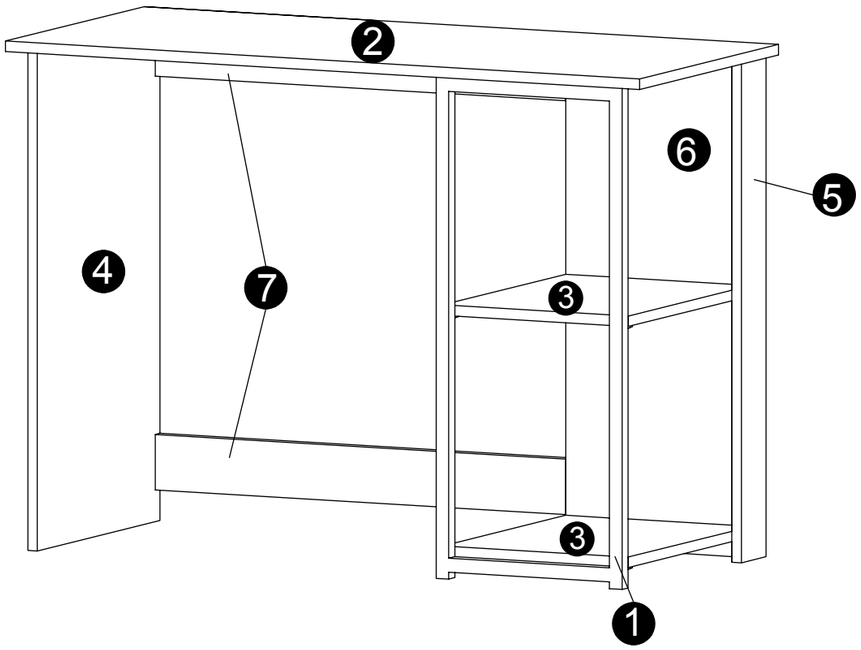


**USEFUL HINTS BEFORE YOU START:**

1. Read each step carefully before assembling.
2. It is important that each step is performed in correct order to avoid difficulties.
3. Identify, sort and count the parts before assembly.
4. Assemble your furniture on packaging cardboard to prevent scratch or damage.
5. Clean the product with mild cleanser using soft damped cloth. Do not use harsh or abrasive cleanser.
6. Using incompatible hardware might cause damage to product.



STEP 8

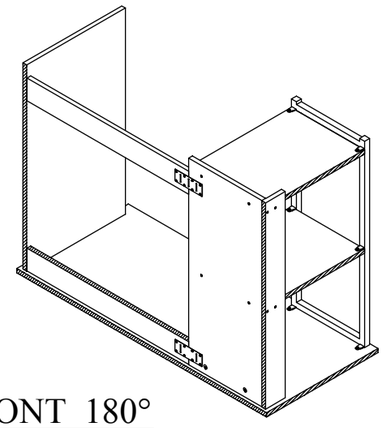

TURN FRONT 180°

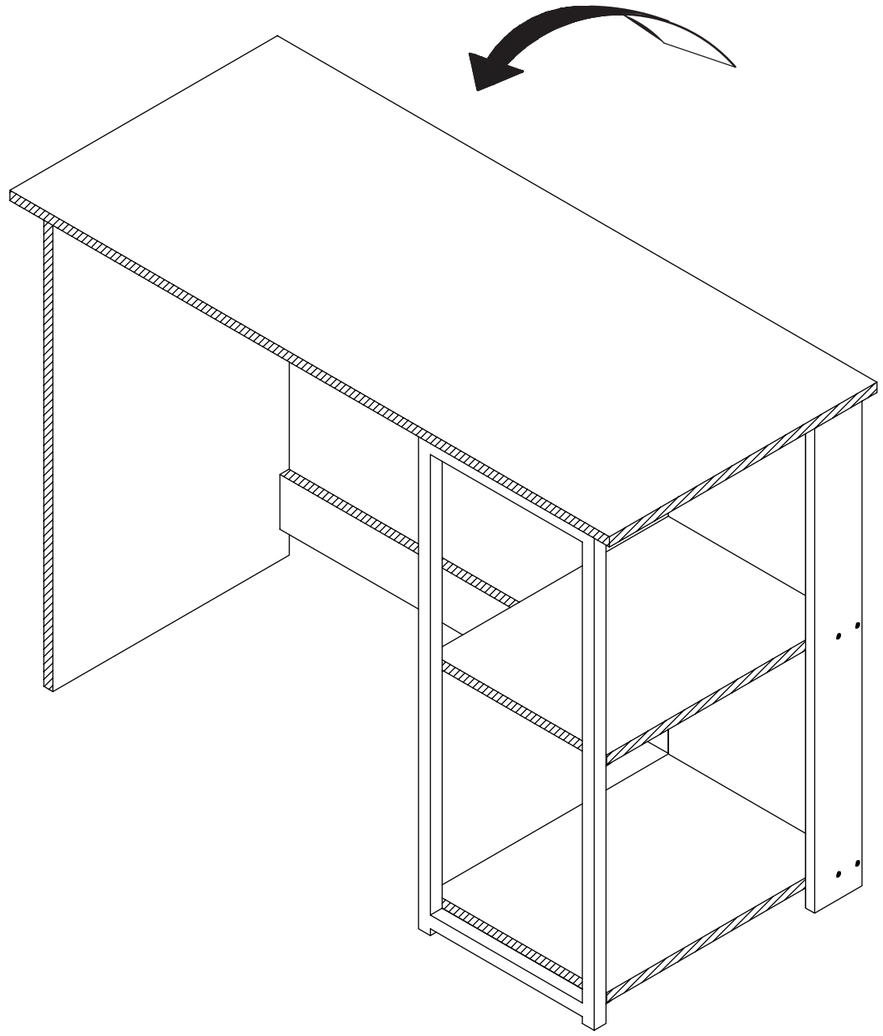

STEP 7

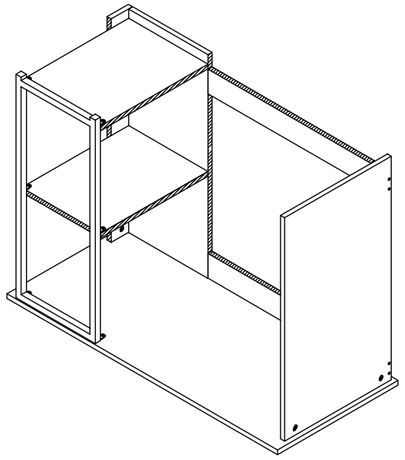

TURN BACK 180°

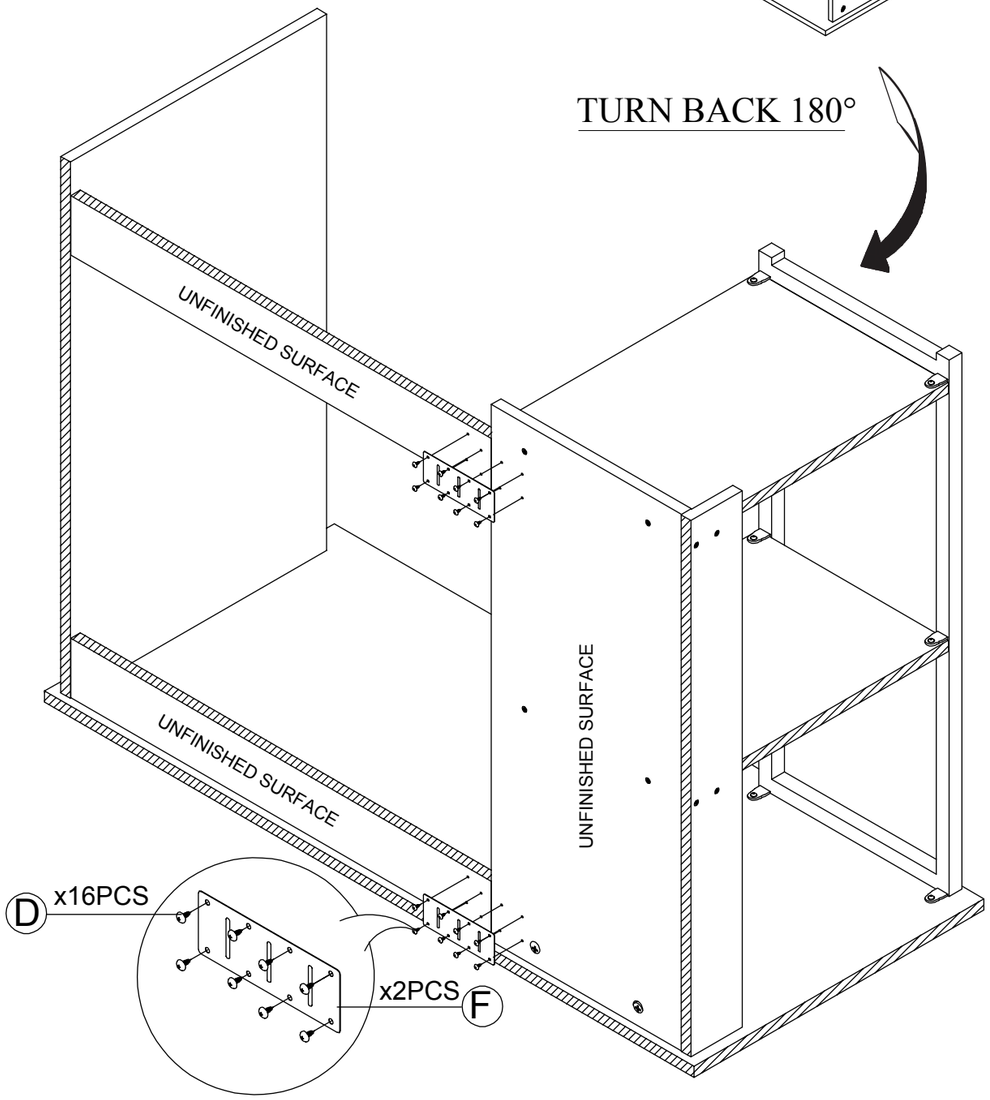




# ASSEMBLY INSTRUCTIONS

BEFORE YOU BEGIN, PLEASE READ ASSEMBLY INSTRUCTION CAREFULLY, FOLLOW THEM STEP BY STEP.

STEP 1

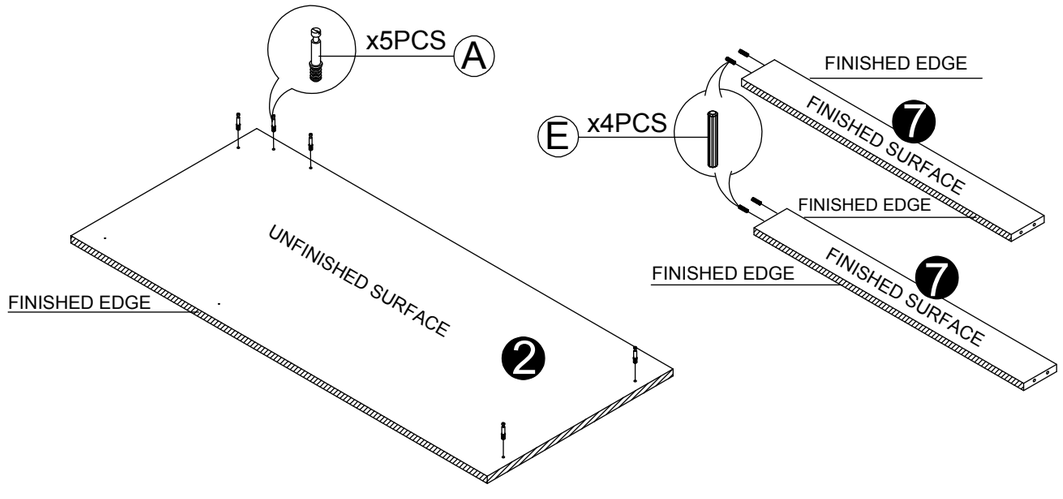


STEP 2

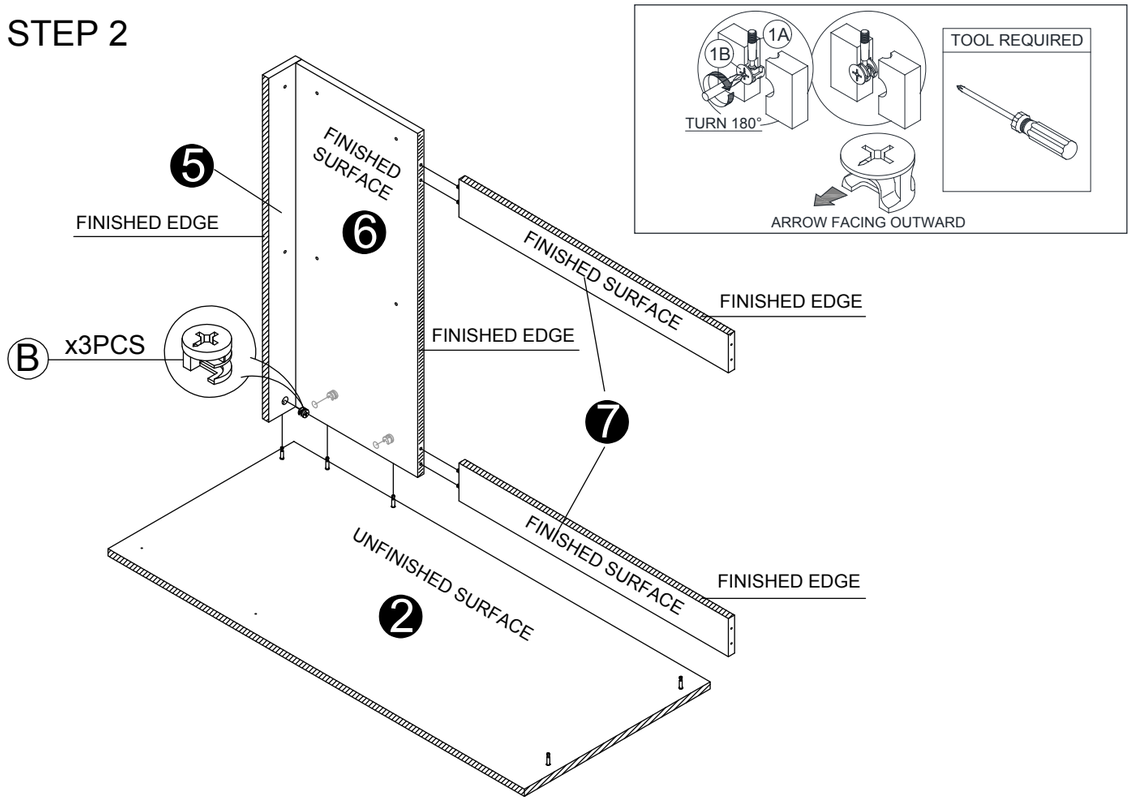

# STEP 3

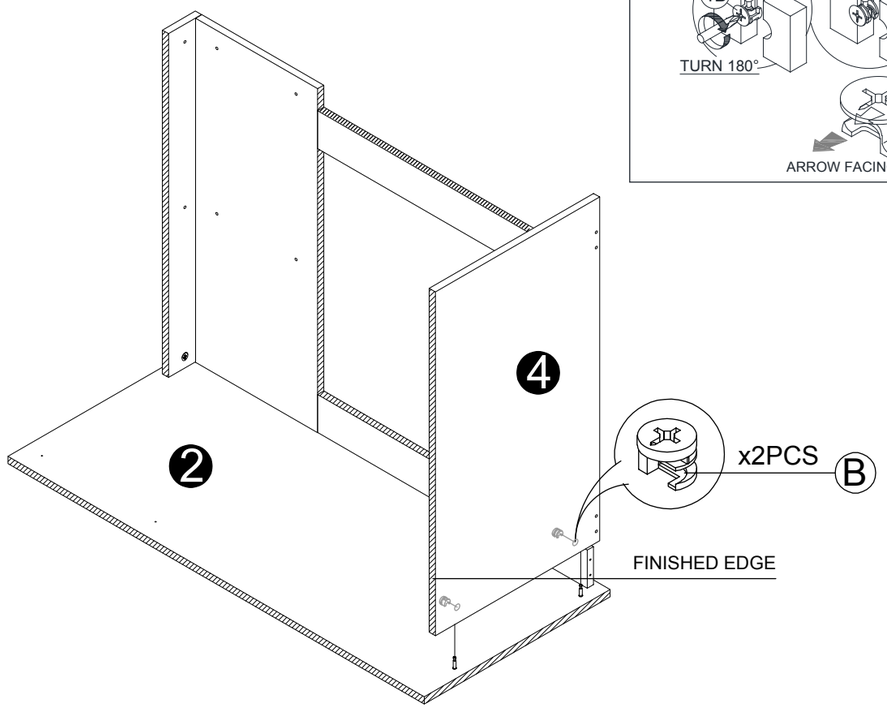


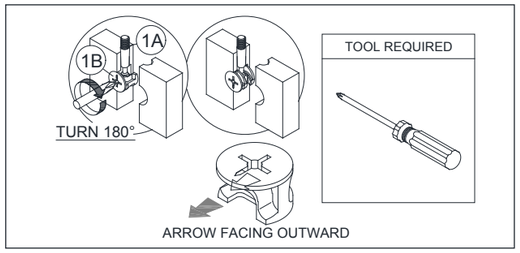


# STEP 4

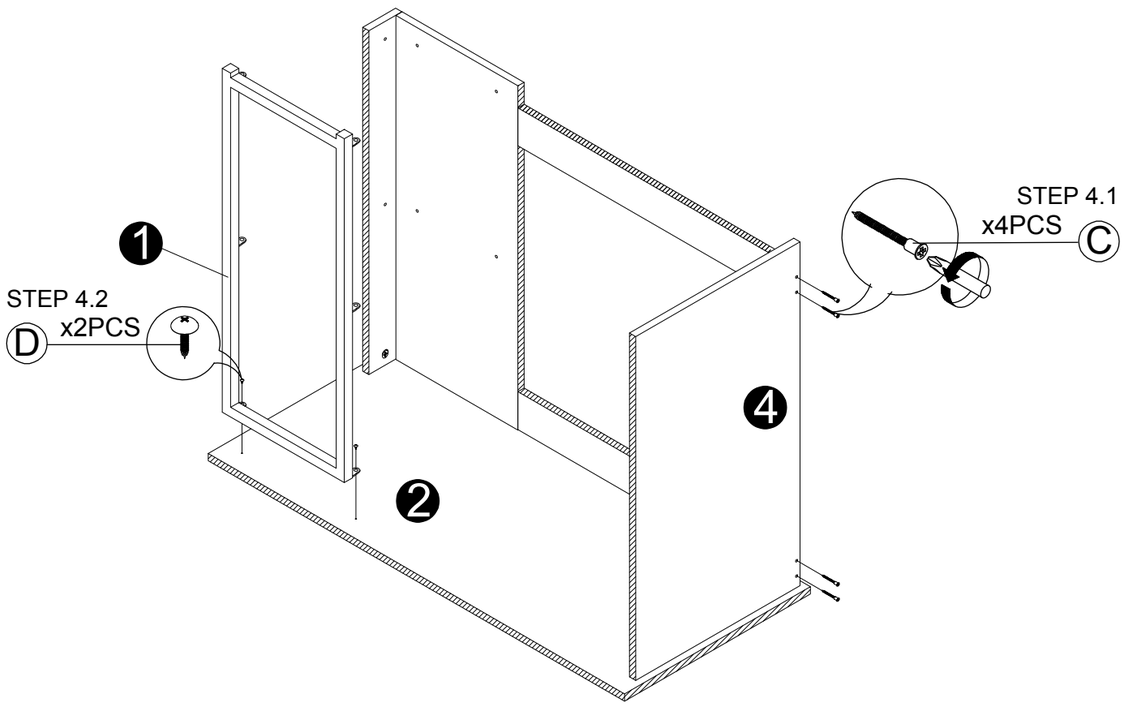




# STEP 5

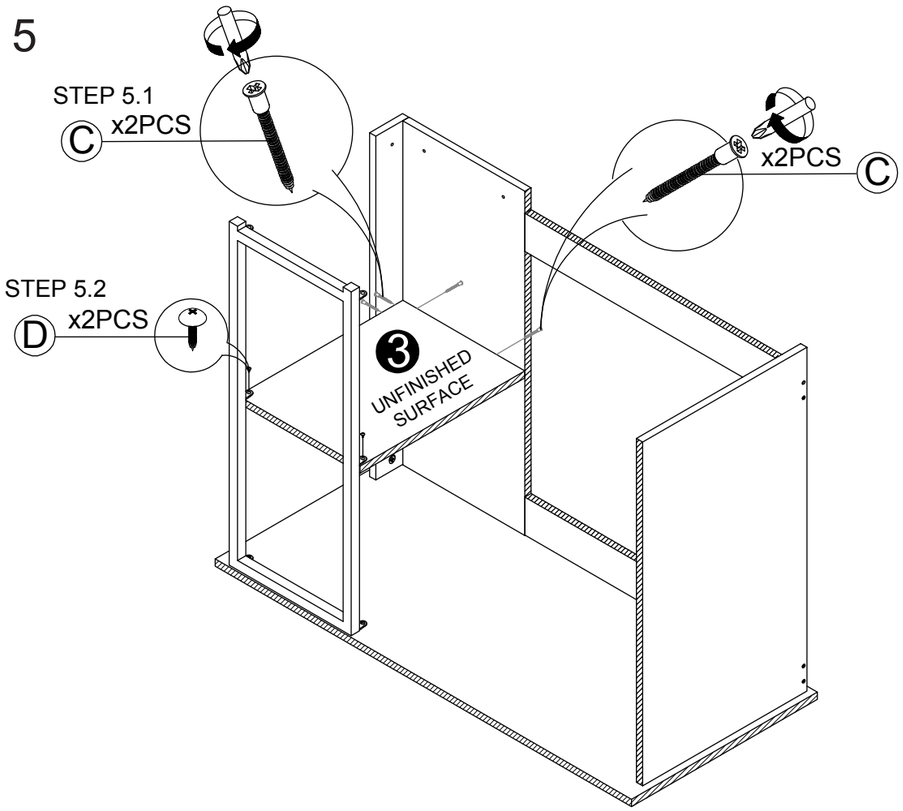


# STEP 6

