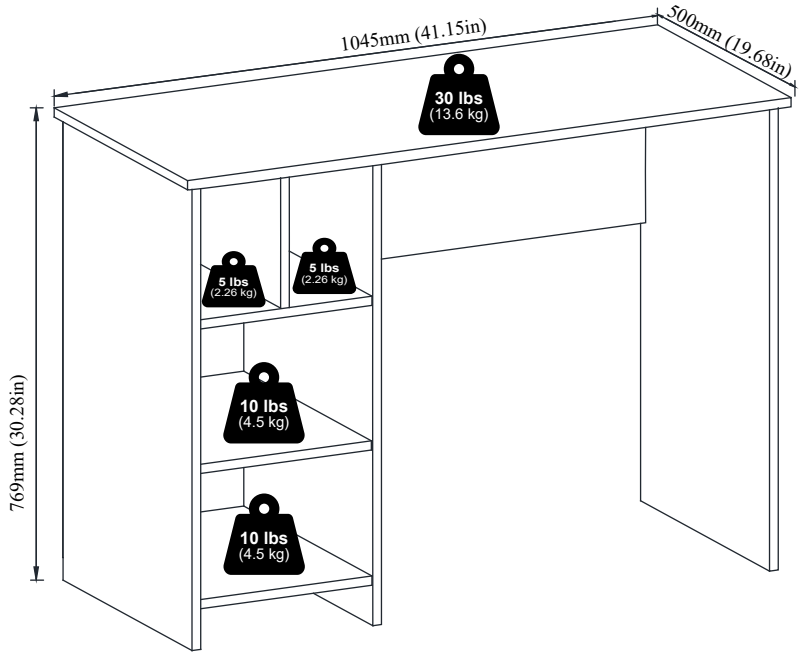

Furinno®

Fits Space, Fits Budget



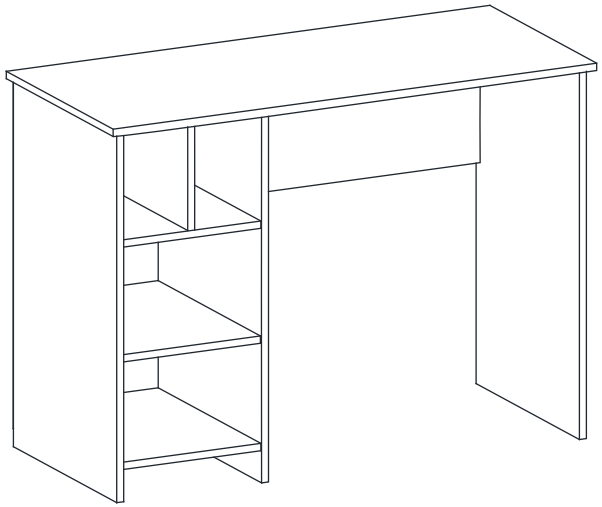

MODEL: 20290

support@furinno.com

www.furinno.com

2029020230523

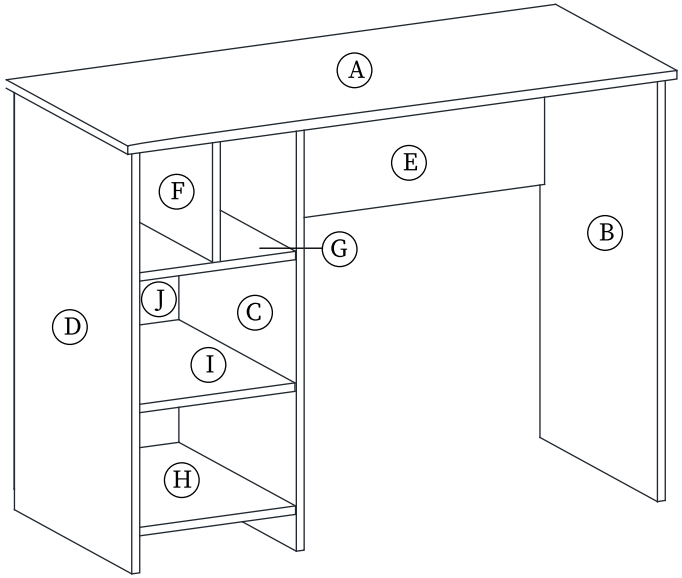

1 x 20 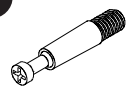 M6 x 31mm	2 x 20  15mm	3 x 10  M6 x 20mm	4 x 4  5 x 6 x 16mm
5 x 22 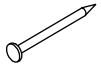 2.5 x 18mm	6 x 1 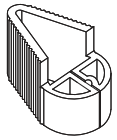		

7

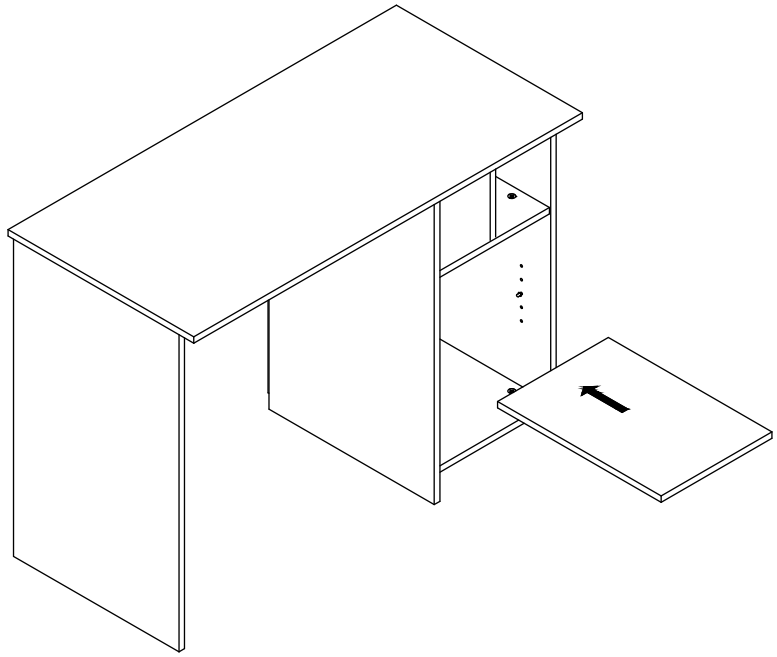

5

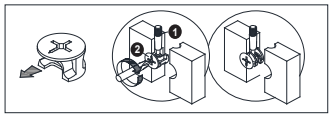

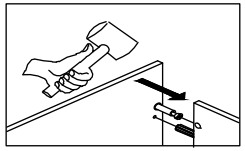

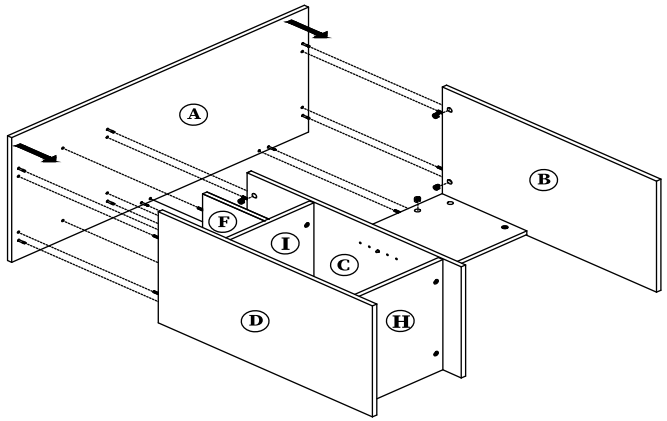
A
B
F
I
C
D
H

6

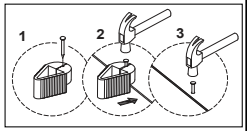
1
2
3

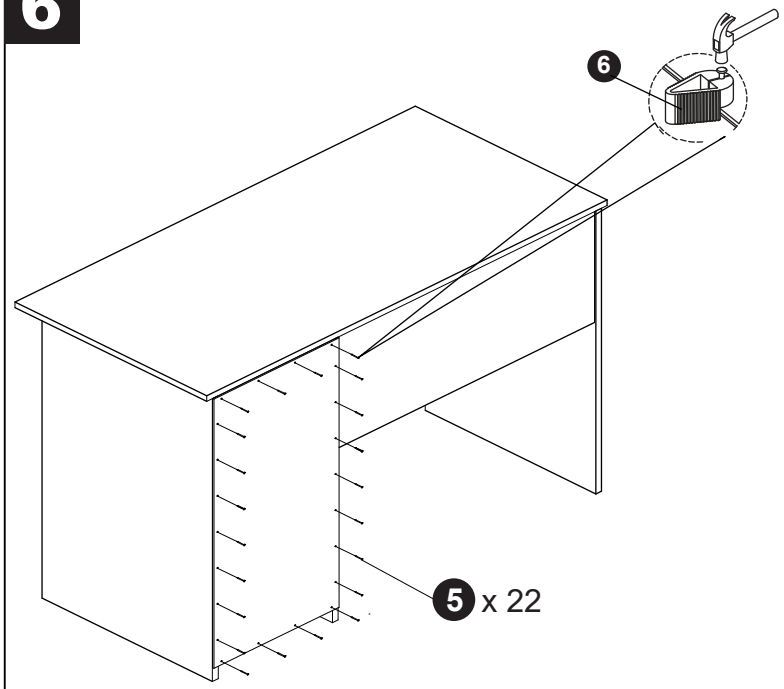
6
5 x 22

1

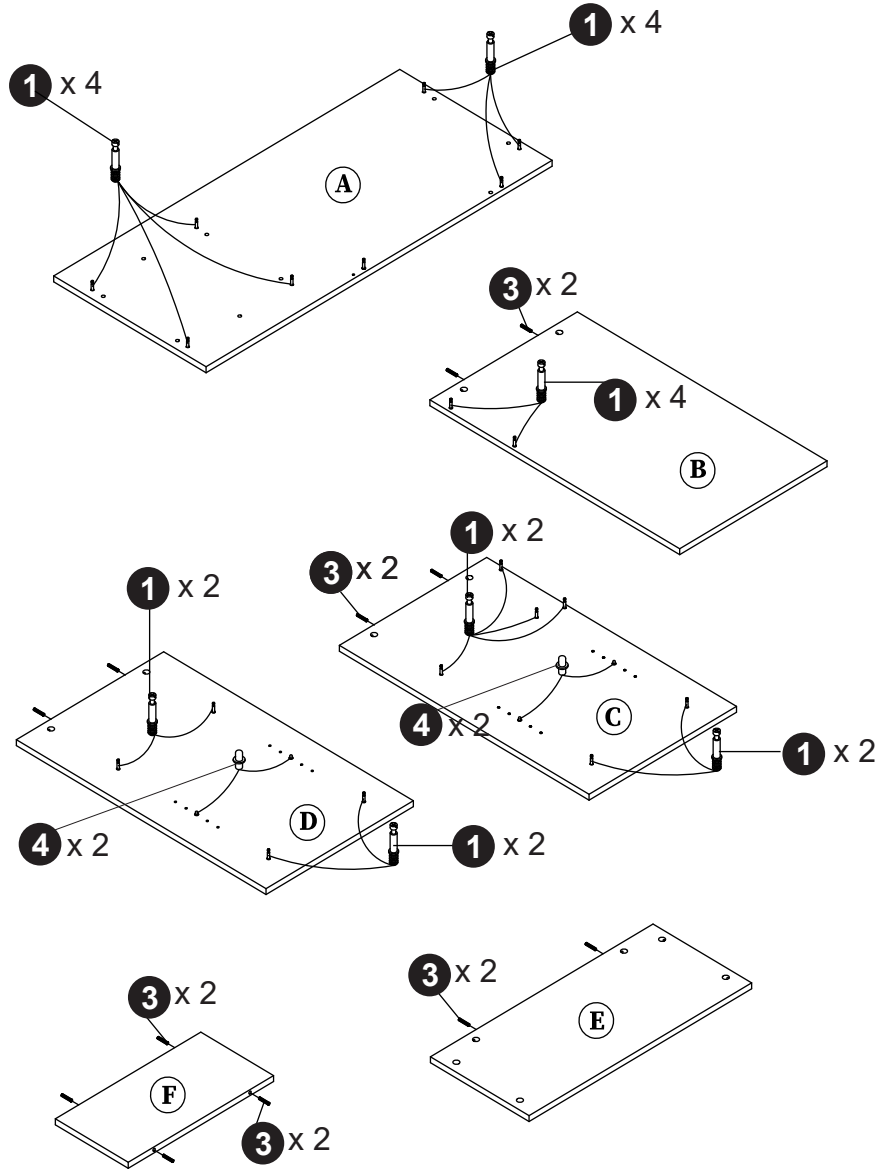
1 x 4
1 x 4
A
3 x 2
1 x 4
B
1 x 2
3 x 2
1 x 2
4 x 2
C
1 x 2
4 x 2
D
1 x 2
3 x 2
F
3 x 2
3 x 2
E

2

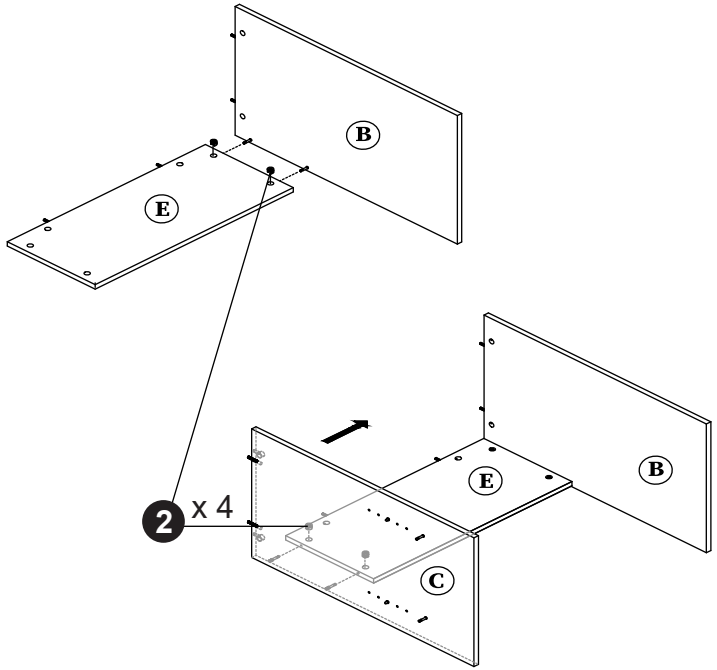

3

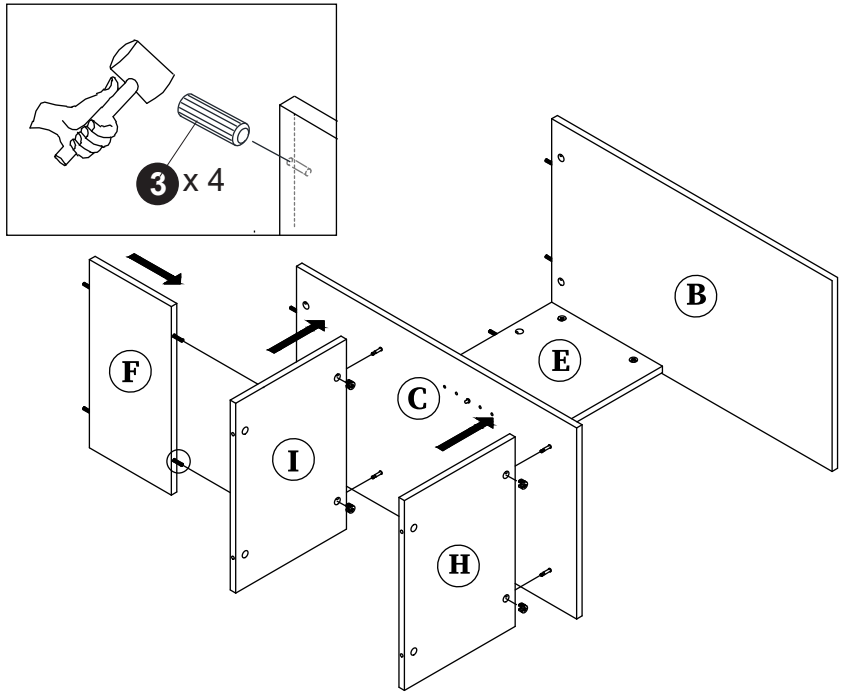

4

